罗拉车 工业缝纫机

INDUSTRIAL SEWING MACHINE

使用说明及零件手册

INSTRUCTION MANUAL

AND

SPARE PARTS MANUAL

操作使用之前请仔细阅读此说明书
保留此说明书以供将来参考

Read instructions carefully and understand them before using.
Retain this instruction manual for future reference.

危险警告

机器运作过程中，必须在机器的前后各保留1 m 的自由工作范围，以保证人员能够随时地、不受阻地接近机器。

在缝纫过程中，不许在缝纫针区域抓取任何东西！
有被针伤的危险！

调整工作过程中，不许在工作台上放任何物品！
物品有被卡住或者被甩走的可能！ 有被四下乱飞的物品伤害的危险！

不许开动没有支承件 1 的机器！因为机头非常重，当向后倾斜时，机器有向后翻倒的危险！

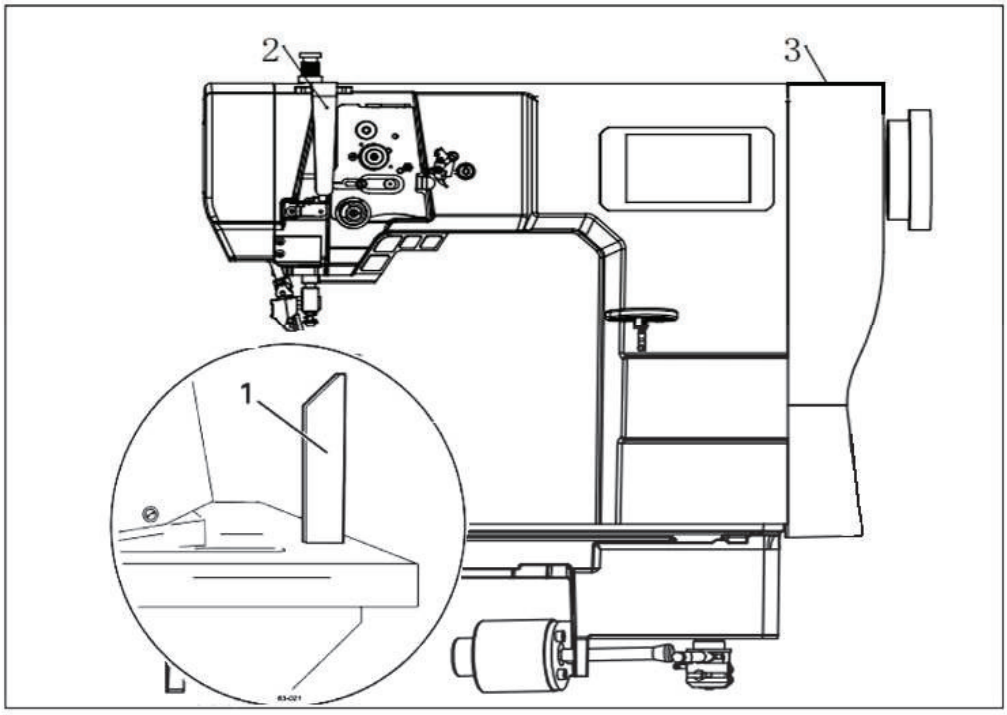

在向后倾斜机器前关闭总开关！
有被机器意外地起动伤害的危险！

不许开动没有挑线杆护罩 2 的机器！
有被挑线杆的动作伤害的危险！

2. 安装　Installation

在机器安装地点，必须有与机器相符的电源接口。
在机器安装地点，必须有平整、坚固的地面，以及充分的照明。

The site where the machine is installed must be provided with suitable connections for electric current.
It must be ensured that the standing surface of the machine site is firm and horizontal,and that sufficient lighting is provided for.

2.01 台板高度的调整 Adjust the table height

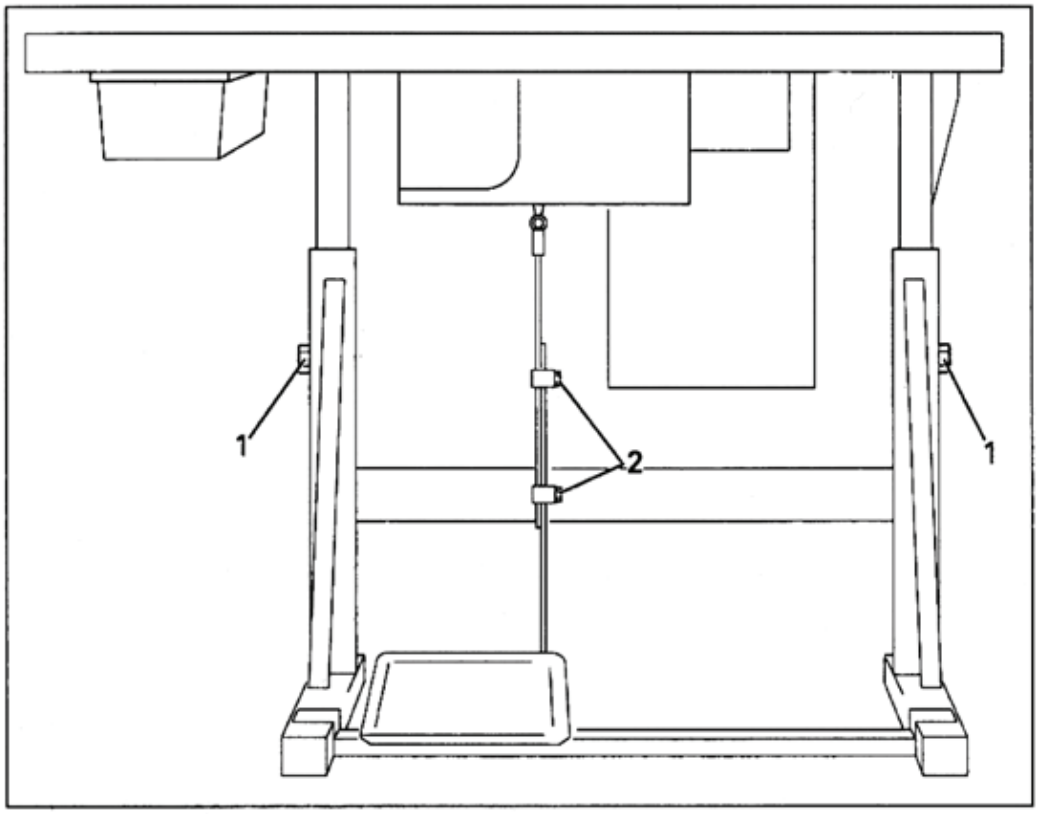

松开螺钉 1 和 2，并将台板调整至所需的高度；
将螺钉 1 牢固地拧紧；
将踏板调至所需的位置，并且将螺钉 2 拧紧。

Loosen screws 1 and 2 ,and set the table height as required;
Firmly tighten screw 1;
Set the required pedal position and tighten screw 2.

2.02 安装倾斜支撑块

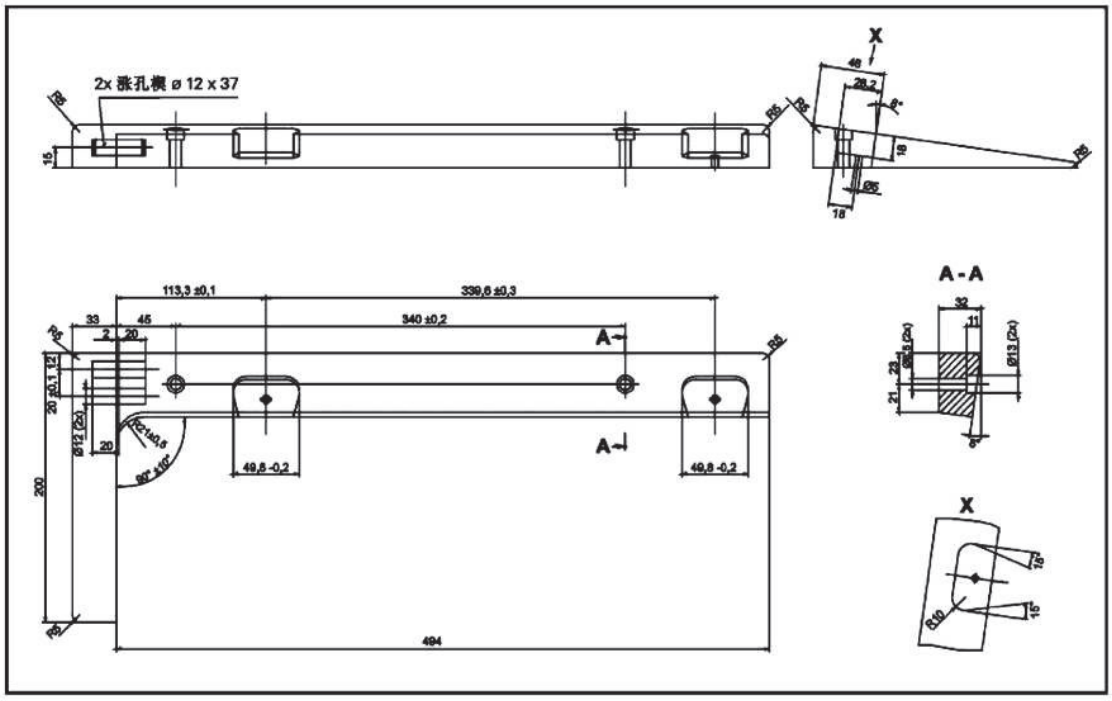

2.03 台板开槽部位尺寸

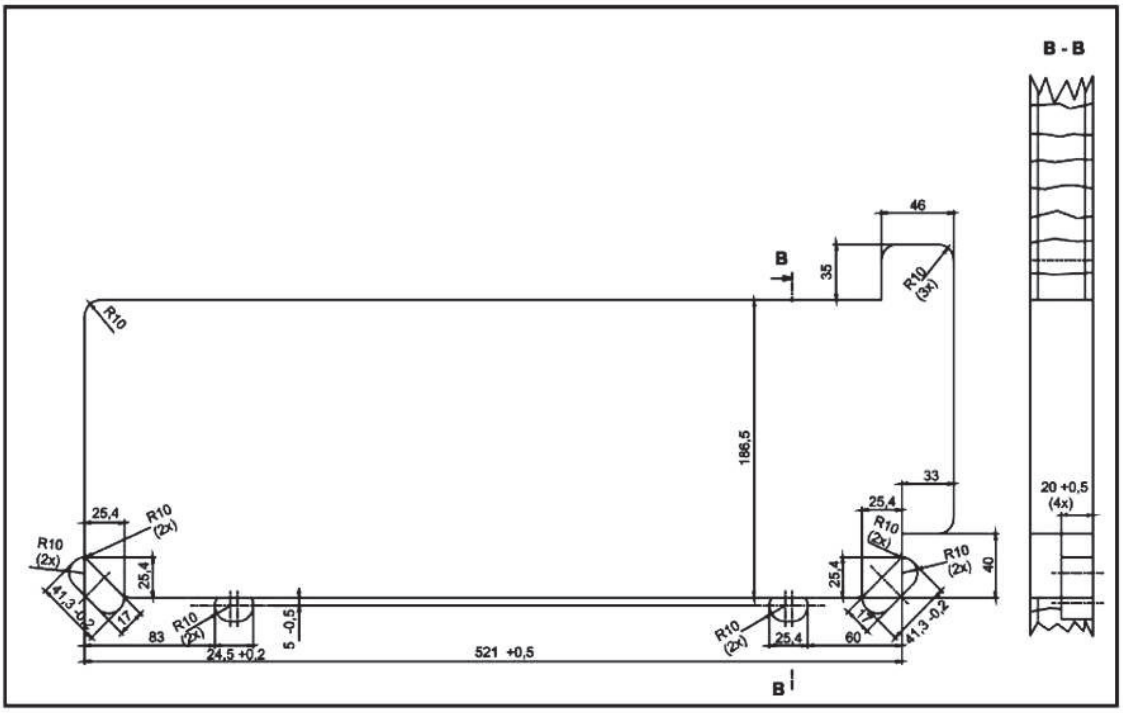

2.04 安装台板

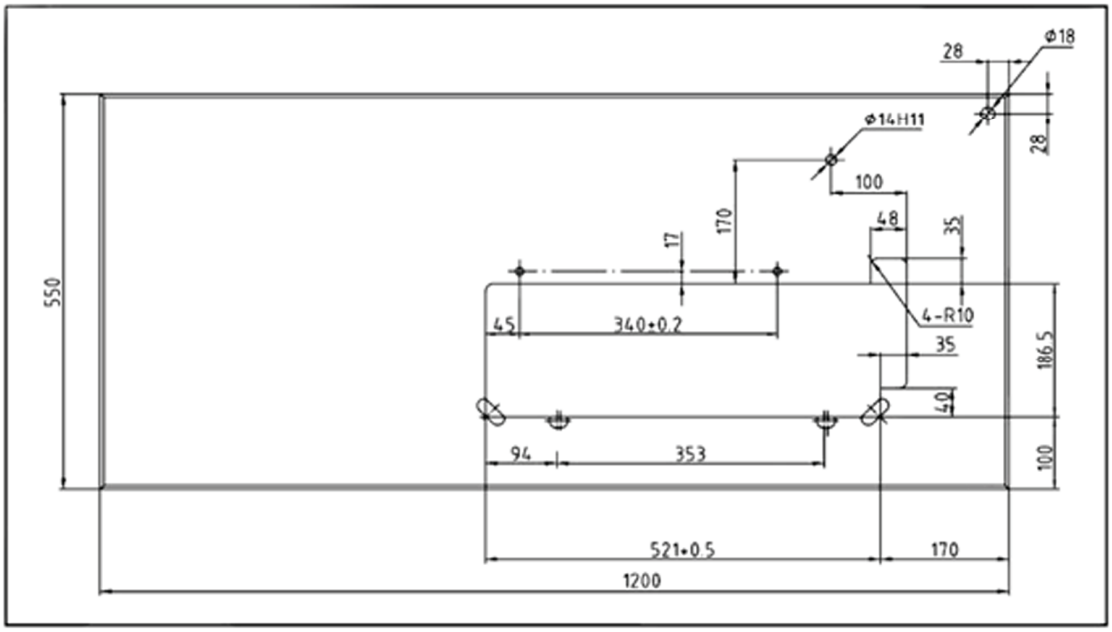

2.05 安装线架 Fitting the reel stand

如图所示安装线架；
然后将线架插入机壳的孔中并用随带的螺钉可靠地固定。

Fit the reel stand as shown in Fig.;
Afterwards insert the stand in the hole of the chassis top and secure it with the screw provided.

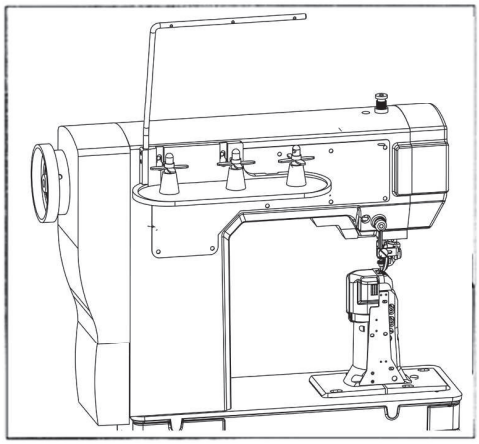

3. 操作件　Controls

3.01 机头按键 Keys on the machine head

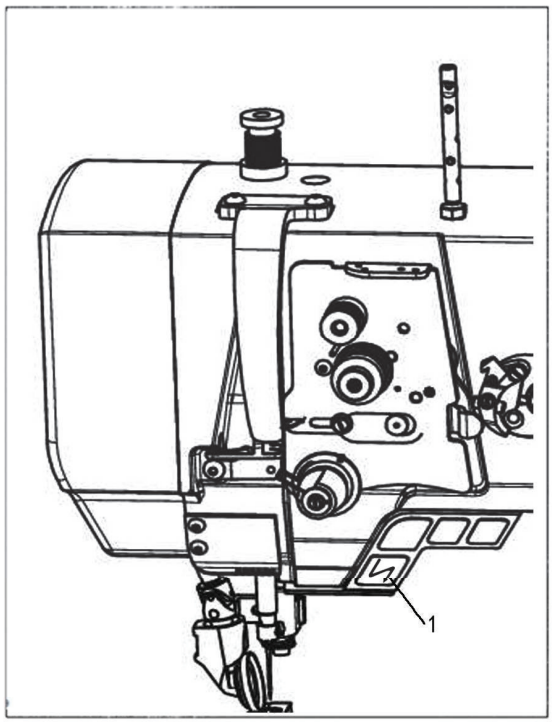

在缝纫过程中，只要按下按键 1，机器的缝纫方向就反转；
其他按键请详见电控说明书。

As long as key 1 is pressed during sewing ,the machine sews in reverse ;
Other keys Instruction Manual of Electronic Control .

3.02 滚轮压脚向外摆动 Swing out roller presser

当滚轮压脚抬起后，可以通过向下轻拉它，使其向外摆动。

When the roller presser is raised , it can be swung out by pulling it lightly down-wards.

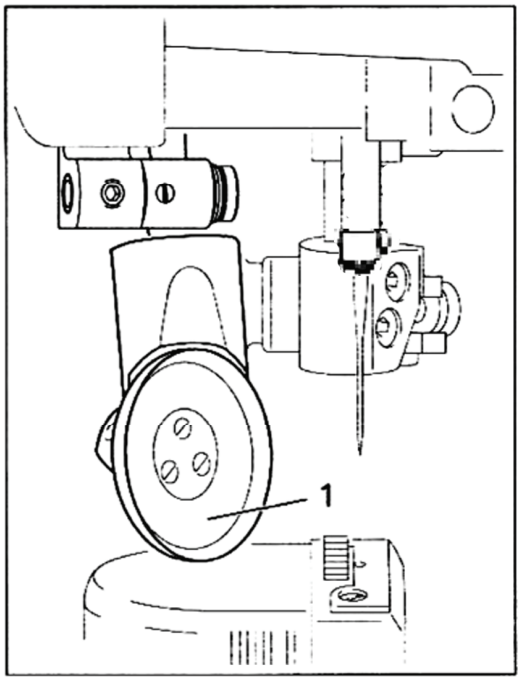

3.03 踏板 Pedal

0 =静止位置 Neutral position
+1 =缝纫 Sewing
-1 =抬起滚轮压脚 Raise roller presser
-2 =剪线 Trim sewing threads

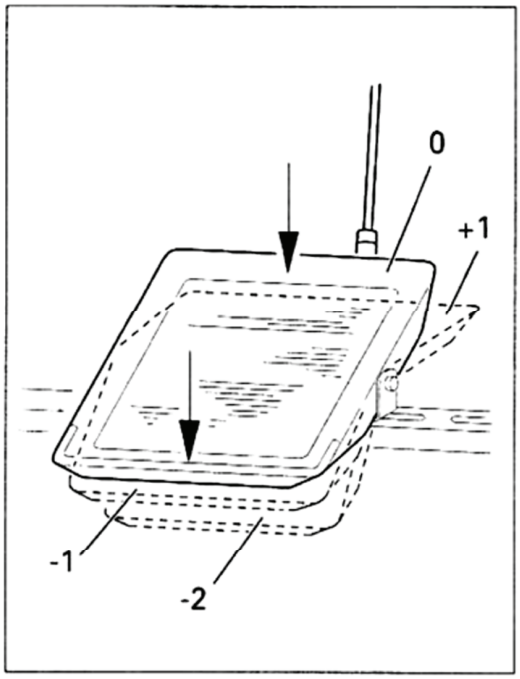

3.04 滚轮压脚扳手 Lever for lifting roller presser

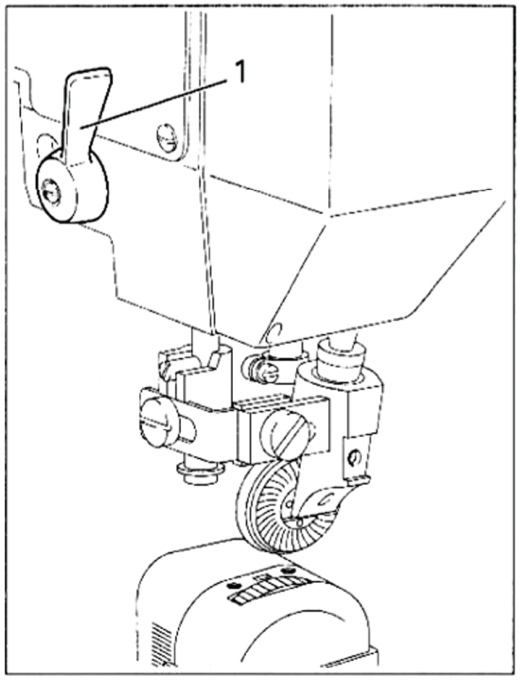

可以通过转动扳手 1 抬起滚轮压脚。

The roller presser can be raised by turning lever 1 .

3.05 膝控 Knee lever

可以通过向箭头所示方向挤压膝控杆 1 来抬起滚轮压脚。

The roller presser can be raised by pressing the knee lever 1 in the direction of the arrow.

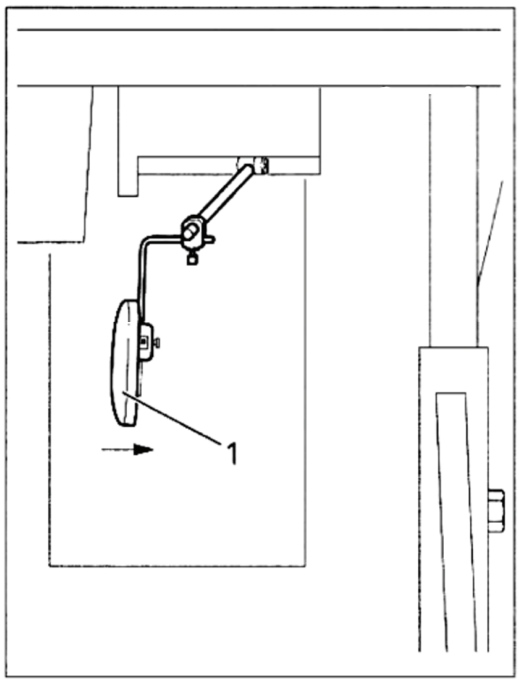

4. 缝纫操作准备　Preparation

必须遵守本说明书中所有的规定和提示，特别要注意所有的安全规定；
所有机器准备工作只允许由受过相应培训的人员完成；
在所有的机器准备工作时，必须通过关闭总开关或者从电源插座上拔出插头，以使机器断电。
All instructions and regulations in this instruction manual must be observed , special attention must be paid to all safety regulations ;
All setting-up work must only be carried out by personnel with the appropriate training ;
For all setting-up work the machine must be disconnected from its power supply by turning off the on/off switch , or removing the plug from the electric power socket.

4.01 安装机针 Inserting the needle

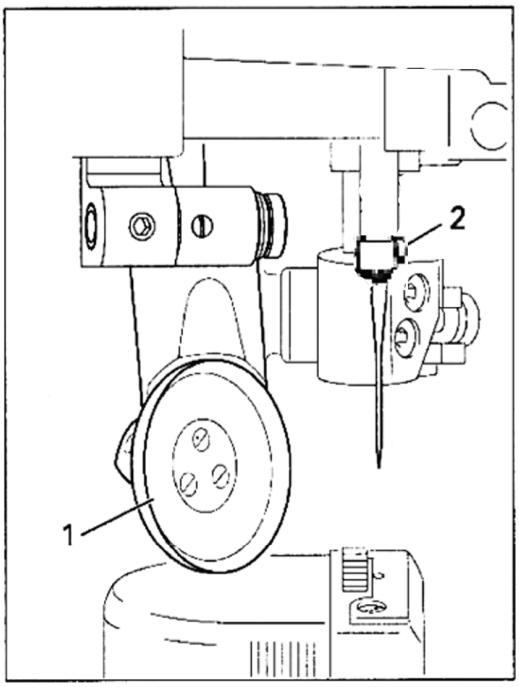

抬起滚轮压脚 1 并将其向外摆动；
松开螺钉 2 并插入机针，使机针的长槽背对着各自勾线的旋梭（即勾线旋梭在左，长槽就向右；勾线旋梭在右，长槽就向左）；
拧紧螺钉 2 并将滚轮压脚摆回到原位置。

Raise the roller presser 1 and swing it out ;
Loosen screws 2 and insert the needle as far as possible , the long groove must be contrary to the hook (If the hook is on the left, the long groove must be on the right);
Tighten screw 2 and swing roller presser 1 back into position.

4.02 绕梭芯线，调整梭芯线的张力。

Winding the bobbin thread ,adjusting the thread tension.

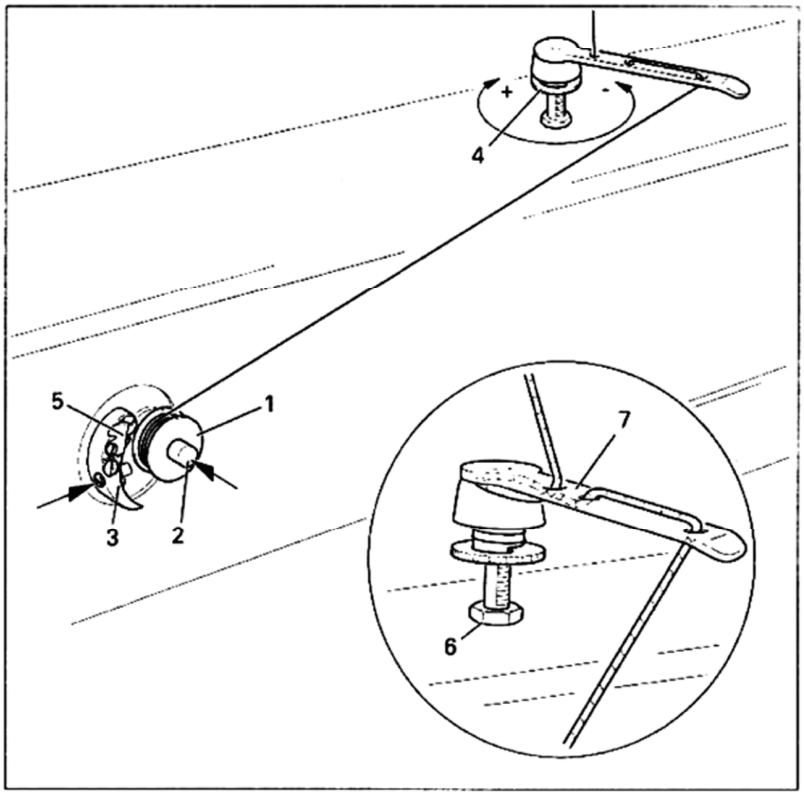

将一个空的梭芯 1 安装到绕线器轴 2 上；
如图所示，给梭芯穿线，并将线顺时针方向在梭芯上绕几圈；
同时压下绕线器轴 2 和杠杆 3，启动绕线器。
Place an empty bobbin 1 onto bobbin shaft 2;
Thread the bobbin in accordance with Fig. and wind it anti-clockwise around bobbin 1 a few times;
Switch on the bobbin winder while at the same time pressing bobbin winder spindle 2 and lever 3.

缝纫过程中的梭芯绕线
在梭芯 1 上的线张力可以用滚花螺母 4 进行调节；
当梭芯绕满线后，绕线器自动停止；
如果绕线不均匀，可以松开螺母 6，相应转动调整导线板 7 并拧紧螺母 6。
The bobbin fills up during sewing
The tension of the thread on bobbin 1 can be adjusted with knurled nut 4;
The bobbin winder stops automatically when bobbin 1 is full;
If the thread is wound unevenly , loose nut 6 and turn thread guide 7 accordingly .Retighten nut 6 after the adjustment .

4.03 取出/装入梭壳　Removing/Inserting the bobbin case

取出梭壳：
打开旋梭盖；
抬起梭门闩 1 并取出梭壳 2 。
装入梭壳：
装入梭壳 2；
关闭梭门闩 1 并重新合上旋梭盖。

Removing the bobbin case :
Open the post cap ;
Raise latch 1 and remove bobbin case 2 .
Inserting the bobbin case :
Insert bobbin case 2 ;
Close the latch 1 and close the post cap .

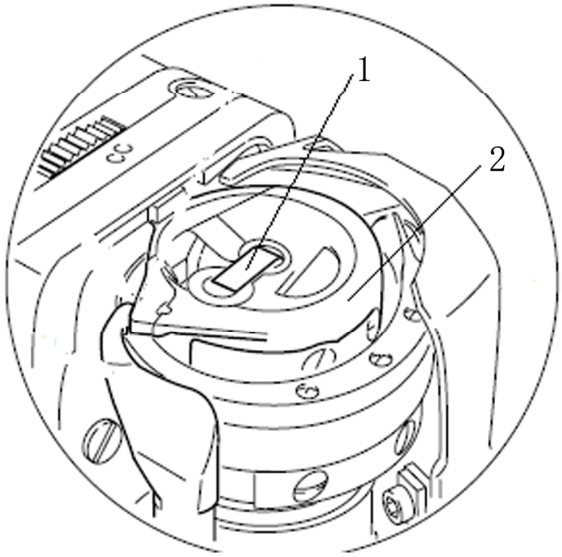

4.04 梭壳穿线/调节梭芯线的张力

Threading the bobbin case/Adjusting the bobbin thread tension

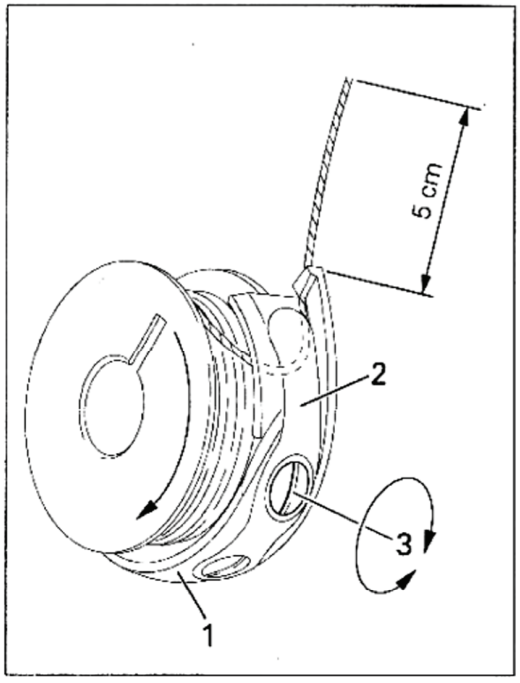

将梭芯装入梭壳 1 中；
将线穿过弹性压板 2 下的狭槽中；
将线穿过凹口处；
通过旋动螺钉 3 调节梭芯线张力。

Insert the bobbin into the bobbin case ;
Pass the thread through the slot under spring 2 ;
Pass the thread through the notch;
Adjust the thread tension by turning screw 3 .

4.05 单针机型上穿针线并调整针线张力

Threading the needle thread and regulating its tension on the single needle machine on model single needle.

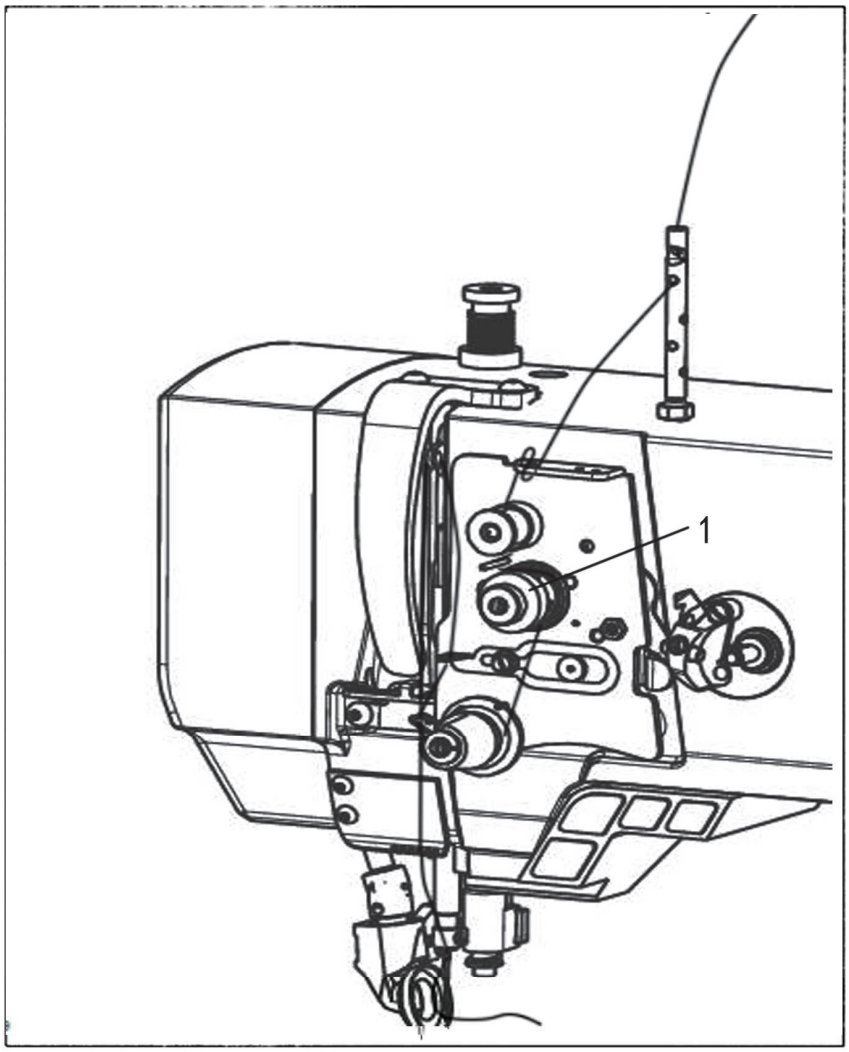

如图所示穿针线；
在左旋梭机型上，针线是从右向左穿；而在右旋梭机型上，针线是从左向右穿；
通过转动滚花螺母 1 调节针线的张力。

Thread the needle thread as shown in Fig. ;
On model left hook the needle is threaded from the right to the left ,and on model right hook from the left to the right;
Adjust the needle thread tension by turning milled nut 1 .

5. 维护与保养 Care and maintenance

清洁	每天，如果持续运转时，每天多次
油量检查（线润滑/旋梭润滑）	每天，开机之前
给旋梭加油	每天，开机之前
伞齿轮副润滑	每年一次
检查/调节空气压力	每天，开机之前
清洁空气滤清器/润滑器的过滤网	在需要时
Clean	daily , more frequently if in continuous operation
Oil level (thread lubrication/hook lubrication)	daily , before use
Oil the hook	daily , before use
Lubricate the level gears	once a year
Check/adjust air pressure	daily , before use
Clean air filter of air filter/lubricator	when required

5.01. 清洁 Cleaning

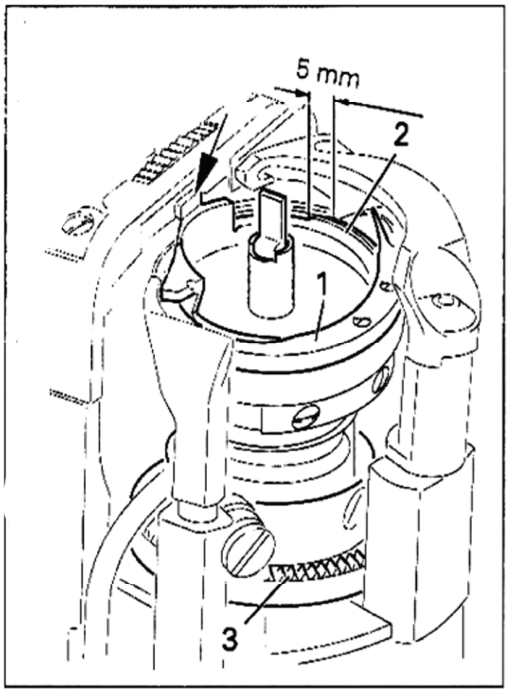

每天清洁旋梭，旋梭腔和齿轮 3，如果持续运行时，每天清洁多次。

Clean the hook ,hook compartment and toothed wheel 3 every day , several times if in continuous use .

关闭机器电源；

将针杆升到最高位置；

打开旋梭盖，取出梭壳和梭芯；

拧松内梭头舌 1 的螺钉；

转动手轮，直到梭壳 2 的尖端进入旋梭的导槽内大约 5mm；

取出梭壳 2；

用石蜡清洁旋梭槽；

当放入梭壳 2 时，要确信梭壳 2 的凸出鼻端部分啮合入针板的凹槽中；

拧紧内梭头舌 1 的螺钉并盖上旋梭盖。

Bring the needle bar to its highest position ;

Open the post cap and remove the bobbin case cap and the bobbin ;

Unscrew hook gib 1 ;

Turn the hand wheel until the point of bobbin case 2 penetrates into the groove of the hook race approx.5mm ;

Remove bobbin case 2 ;

Clean the hook race with paraffin ;

When inserting the bobbin case 2 , ensure that the horn of the bobbin case 2 engages in the groove of the needle plate ;

Screw hook gib 1 back on and close the post cap .

5.02 给旋梭加油　Oiling the hook

关闭机器电源；
每天注 1-2 滴油到内梭头舌的孔 1 中；
在机器试车前及在长期停机后，注入几滴油到旋梭的槽中（参见箭头所示）。

Switch the machine off ;
Pour 1-2 drops of oil into hole 1 of the hook gib daily ;
Before commissioning the machine , and after long periods out of operation , pour a few drops of oil into the hook race (see arrow) .

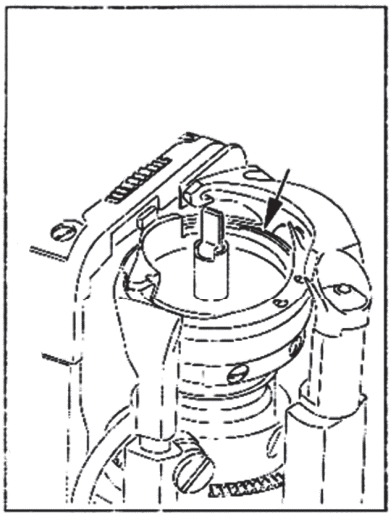

5.03 旋梭润滑油盒　Oil bowl for hook lubrication

在每次开机前检查油量，必须始终保持油盒 1 中有油。如果需要可通过加油孔加油。

只允许使用在 40℃时平均粘度为 22.0mm²/s 和在 15℃时密度为 0.865g/cm³ 的润滑油。

Check the oil level before each use ,there must always be oil in reservoir 1 .If required refill oil through hole.

Use only oil with a mean viscosity of 22.0mm²/s at 40℃ and a density of 0.865 g/cm³ at 15℃ .

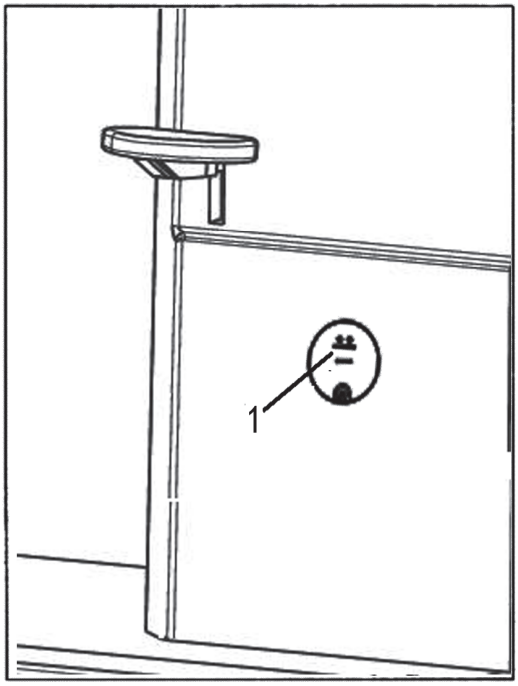

5.05 给伞齿轮副润滑　Lubricating the bevel gears

关闭机器电源！
所有伞齿轮副每年必须加一次新油脂。
向后翻转机头到支撑件上。
Switch the machine off !
All bevel gears must be supplied with new grease once a year.
Tilt the sewing head back onto the support.

如图所示机型的伞齿轮副。
涂油脂到齿轮的全部齿侧面（见箭头所示）。
Fig. shows the bevel gears of the machine .
Apply grease to all the tooth flanks and the rack (see arrows) .

我们推荐使用滴点大约为 150° C 含钠油脂。
We recommend sodium grease with a dripping point of approx.150° C .

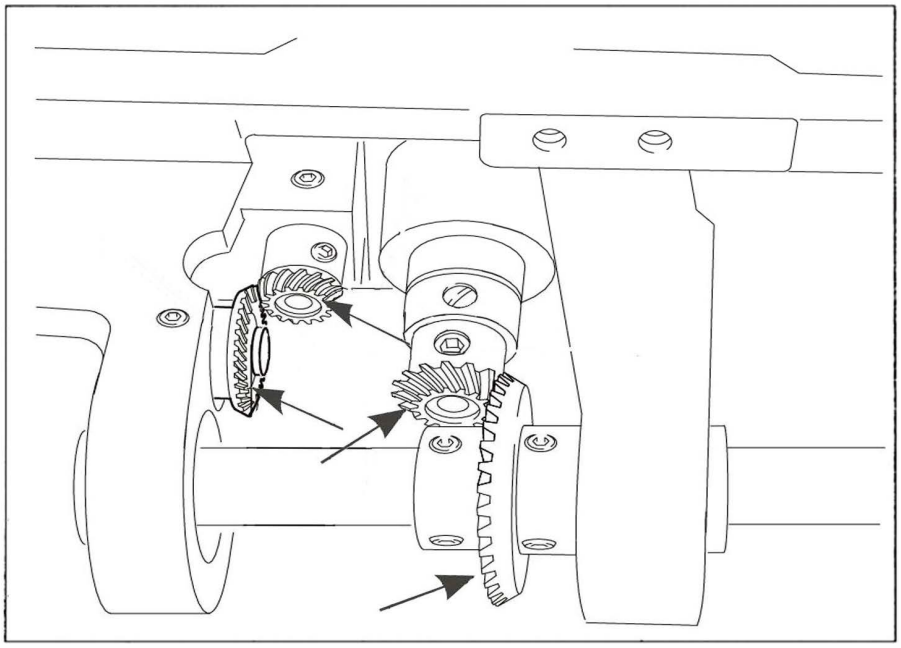

警告：必须用双手将机头放回垂直位置
　　有在机头和台板之间被挤伤的危险!
Warning :Use both hands to set the sewing head upright .
　　Danger of crushing between the sewing head and the table top !

第二部分

零件部分
PARTS LIST

1. 机身部件
Housing sections

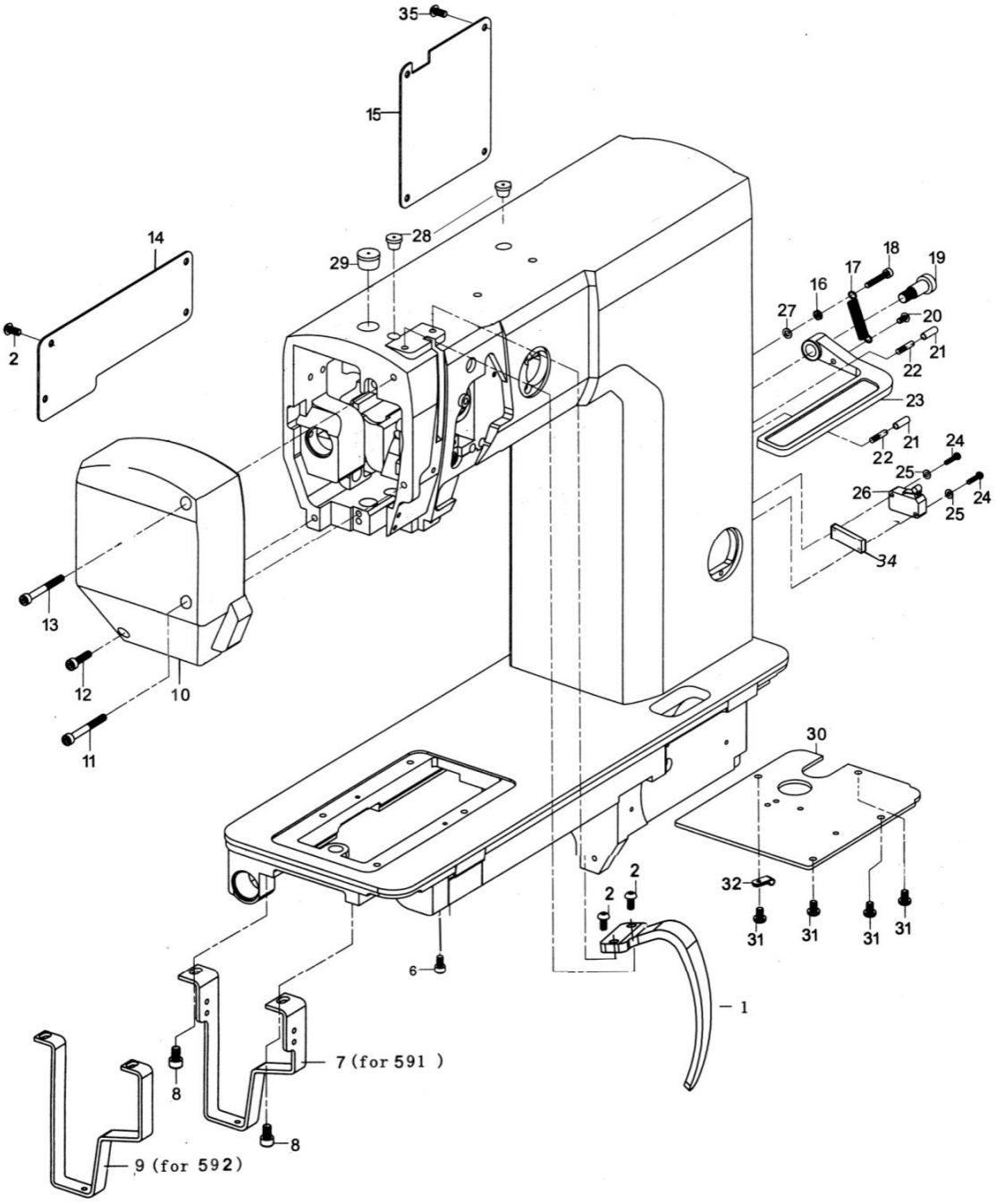

Per.No	Part No	Description	Qty
01	JINPFNA0101	protecting mask	1
02	JINPFNA0102	Screw M5x10	8
05	JINPFNA0105	Trestle board	1
06	JINPFNA0106	Screw M6x 10	1
07	JINPFNA0107	Bracket (For 591)	1
08	JINPFNA0106	Screw M6x 10	2
09	JINPFNB0109	Bracket (For 592)	1
10	JINPFNA011001	Panel	1
11	JINPFNA0111	Screw M5x60	1
12	JINPFNA0112	Screw M5x25	1
13	JINPFNA0113	Screw M5x78	1
14	JINPFNA0114	Back cover board painting	1
15	JINPFNA0115	Back cover board	1
16	JINPFNA0116	NUT M4	1
17	JINPFNA0117	Spring	1
18	JINPFNA0118	Screw M4x25	1
19	JINPFNA0119	Screw M5x12	1
20	JINPFNA0120	Screw M4x6	1
21	JINPFNA0121	Oil pipe Φ3xΦ5	2
22	JINPFNA0122	Screw M4x8	2
23	JINPFNA012301	Spanner of reversal stitch	1
24	JINPFNA0124	Screw M3x14	2
25	JINPFNA0125	Washer	2
26	JINPFNA0126	Power switch	1
27	JINPFNA0127	Washer Φ4	1
28	JINPFNA0128	Oil dam	4
29	JINPFNA0129	Oil dam	1
30	JINPFNA0130	plate	1
31	JINPFNA0131	Screw M5X8	3
32	JINSCJ5033	Clamp	1
33	JIN035NA0133B	Enclosure	1
34	JINPFNA0134	Electric switch pad	1
35	JINPFNA0135	Screw M5x 16	2

2. 机头零件(1)
Needle head parts (1)

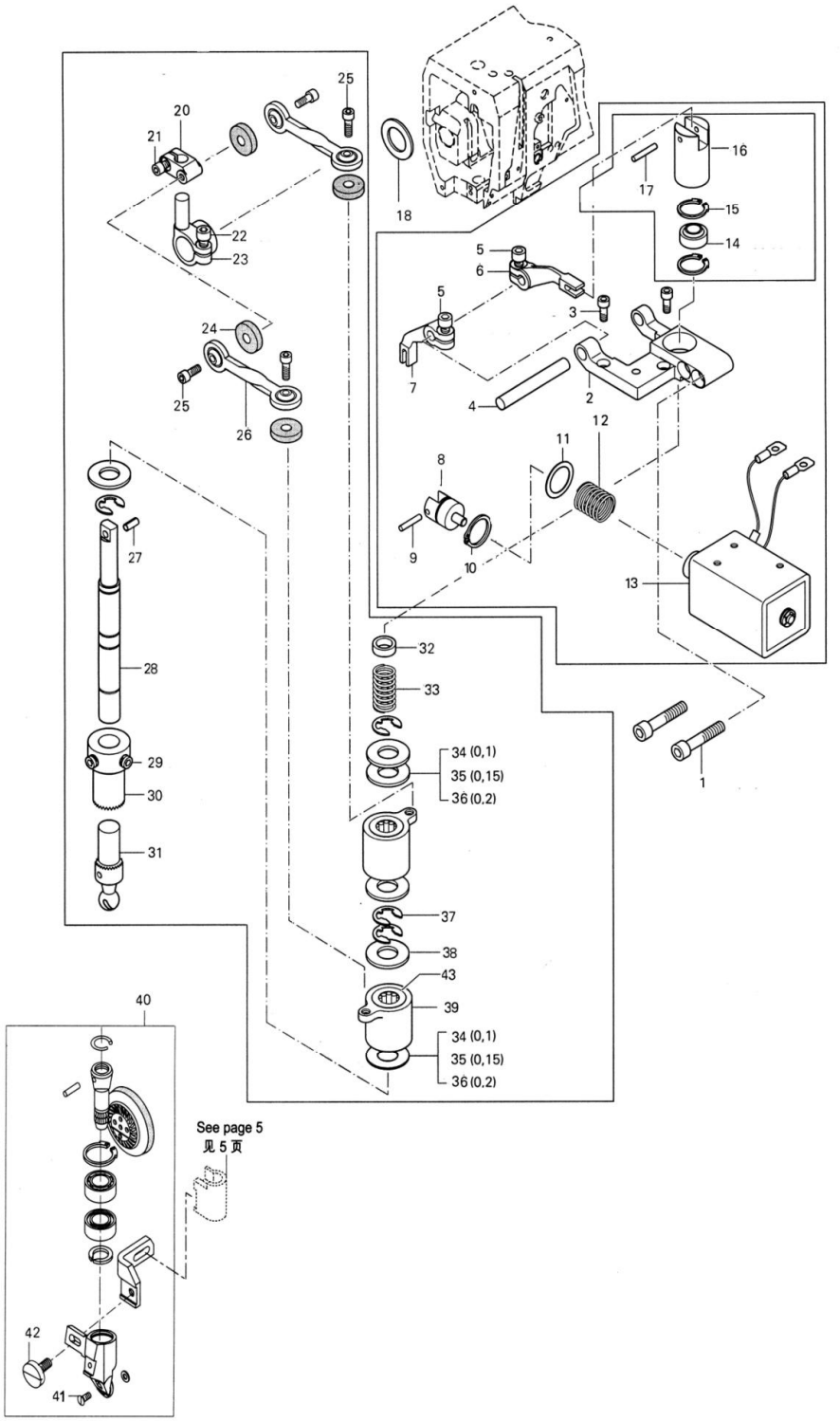

Per.No	Part No	Description	Qty
01	JINPFNA0201	Screw	2
02	JINPFNA0202	Electromagnet plate	1
03	JINPFNA0325	Screw M4x10	2
04	JINPFNA0204	Needle roller	1
05	JINPFNA0131	Screw M5x10	2
06	JINPFNA0206	HEBEL	1
07	JINPFNA0207	HEBEL	1
08	JINPFNA0208	Gabelkopf	1
09	JINPFNA0209	Pin 4x18	1
10	JINPFNA0210	Collar	1
11	JINPFNA0211	Washer	1
12	JINPFNA0212	Pressure spring	1
13	JINPFNA0213	Bobbin join electromagnet	1
14	JINPFNA0214	Crank bearing	1
15	JINPFNA0215	Retaining ring	2
16	JINPFNA0216	BUSHING	1
17	JINPFNA0217	Pin	1
18	JINPFNA0218	Washer 15.1x24.5x1.5	1
20	JINPFNA0220	Base frame	1
21	JINPFNA0203	Screw M4x 10	1
22	JINPFNA0131	Screw M5x 10	1
23	JINPFNA0223	Union	1
24	JINPFNA0224	Felt	4
25	JINPFNA0325	Screw M4X10	4
26	JINPFNA0226	Ball connecting rod	2
27	JINSCJ4020	Pin 3x10	1
28	JINPFNA0228	Roller wheel coupling spindle	1
29	JINPFNA0229	Screw M6X5	2
30	JINPFNA0230	Wheel Gear	1
31	JINPFNA0231	Lower segement	1
32	JINPFNA0232	WASHER	1
33	JINPFNA0233	Pressure spring	1
34	JINPFNA0234	Adjusting washer A	4
35	JINPFNA0235	Adjusting washer B	4
36	JINPFNA0236	Adjusting washer C	4
37	JINSCJ1013	Collar	4
38	JINPFNA0238	washer	4
39	JINPFNA0239	bearing seat asm	2
40	JINPFNA0240	Φ30 Idler wheel foot asm	1
41	JINPFNA0241	Screw M4x8	1
42	JINPFNA0242	Screw M2.5x6	1
43	JINPFNA0243	One way bearing	4
46	JINPFNA0246	Φ30 Idler wheel foot asm	1
47	JINPFNA0247	Φ26 Idler wheel foot asm	1

3. 机头零件(2)
Needle head parts (2)

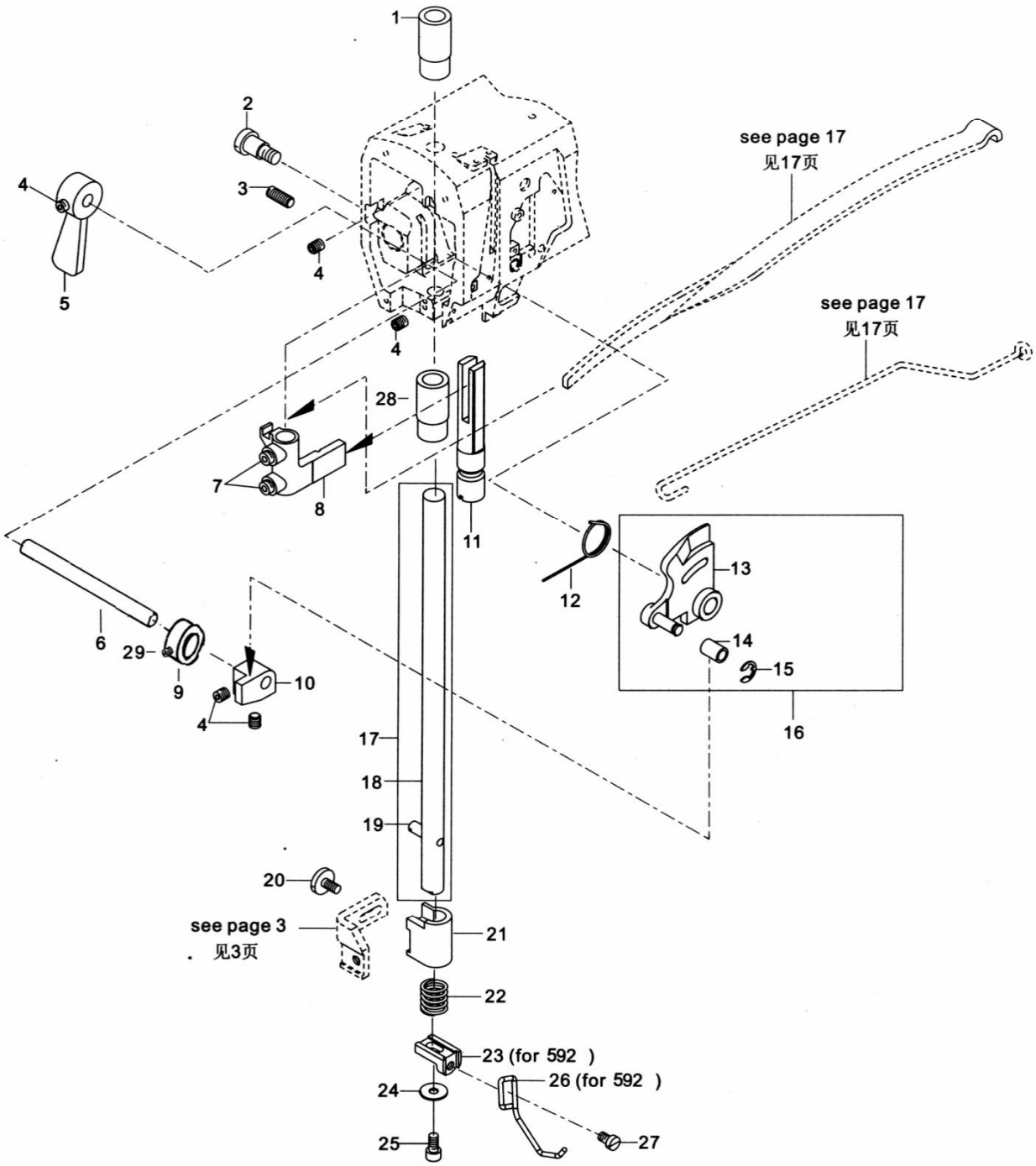

Per.No	Part No	Description	Qty
01	JINPFNA0301	Strut bar bearing	1
02	JINPFNA0302	Screw M6x8	1
03	JINPFNA0303	Screw M6X8	1
04	JINPFNA0304	Screw M5X5	5
05	JINPFNA0305	Presserfoot spanner	1
06	JINPFNA0306	Presser foot lift axle	1
07	JINPFNA0229	Screw M6x5	2
08	JINPFNA0308	Strut bar slides	1
09	JINPFNA0309	Presser feet handle bushing	1
10	JINPFNA0310	Presser foot lift bump	1
11	JINPFNA0311	Strut bar slides guide bar	1
12	JINPFNA0312	Replacement spring	1
13	JINPFNA0313	Presser foot lift jointing	1
14	JINPFNA0314	Presser foot lift pin	1
15	JINPFNA0315	Collar	1
16	JINPFNA0316	Presser foot lift asm	1
17	JINPFNA0317	Presser feet assembly	1
18	JINPFNA0318	Presser feet	1
19	JINPFNA0319	Screw M4x5.2	1
20	JINPFNA0320	Screw M4X8	1
21	JINPFNA0321	Presser feet handle	1
22	JINPFNA0322	Pressure spriimg	1
23	JINPFNB0323	Eccentric swage locating seat (for 592)	1
24	JINPFNA0324	Washer Φ4	1
25	JINPFNA0325	Screw M4X8	1
26	JINPFNB0326	Eccentric swage spring (for 592)	1
27	JINPFNB0327	Screw M4X6	1
28	JINPFNA0328	Pressure bar sleeve	1
29	JINPFNA1810	Screw M4X6	1

4. 机头零件(3)
Needle head parts (3)

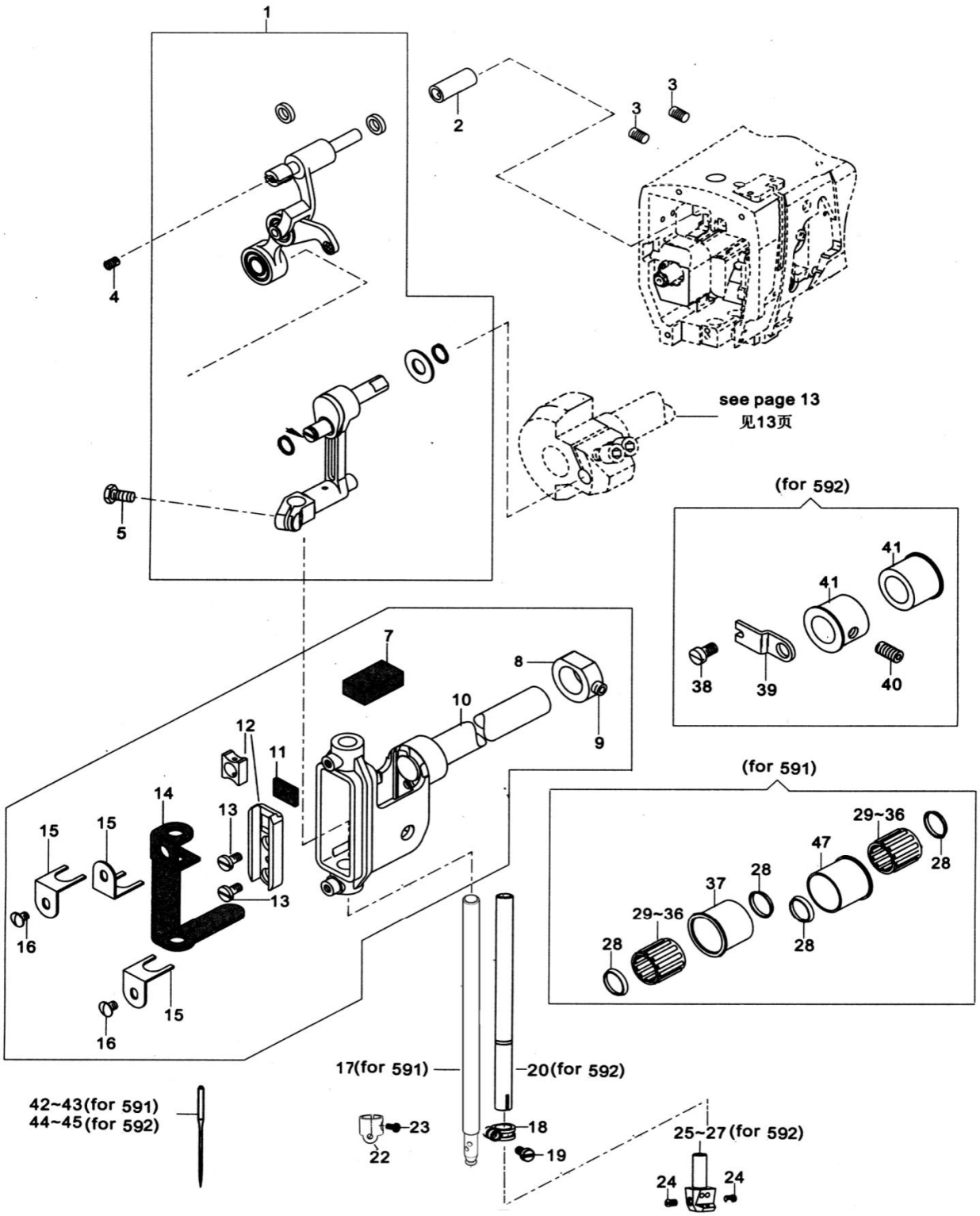

Per.No	Part No	Description	Qty
01	JINPFNA0401	Takeuplever assembly	1
02	JINPFNA0402	Takeuplever pin bushing	1
03	JINPFNA0403	Screw M5x8	2
04	JINPFNA1810	Screw M4x5	1
05	JINPFNA0131	Screw M5x10	1
08	JINPFNA0408	Uper check ring	1
09	JINPFNA0229	Screw M6x0.75x5	1
10	JINPFNA0410	Needle bar assembly	1
12	JINPFNA0412	Needle slider groove asm	1
13	JINPFNA0413	Screw M4x4.5	2
14	JINPFNA0414	Felt	1
15	JINPFNA0415	Linoleum clamp	3
16	JINPFNA0120	Screw M4x4.5	2
17	JINPFNA0417	Needle bar	1
18	JINPFNB0418	Needle bar clamp ring	1
19	JINPFNB0419	Screw M4x8	1
20	JINPFNB0420	Needle bar uper	1
22	JINPF55500311	Arm thread guide	1
23	JINPF1790S0639	Screw M3x8	1
24	JINPFNB0424	Screw M3x3.2	2
25	JINPFNB0425	Pin chuck 3.2 (For 592)	1
26	JINPFNB0426	Pin chuck 2.8 (For592)	1
27	JINPFNB0427	Pin chuck 2.4 (For592)	1
28	JINPFNB0428	Inner retainer ring	4
29	JINPFNB0429	Needle bearing	2
30	JINPFNB0430	Needle bearing	2
31	JINPFNB0431	Needle bearing	2
32	JINPFNB0432	Needle bearing	2
33	JINPFNB0433	Needle bearing	2
34	JINPFNB0434	Needle bearing	2
35	JINPFNB0435	Needle bearing	2
36	JINPFNB0436	Needle bearing	2
37	JINPFNA1114	Bearing bush	1
38	JINPFNB0438	Screw M5x6	2
39	JINPFNB0439	Guide plate	1
40	JINPFNB0440	Screw M6x14	1
41	JINPFNB0441	Needle bar bush	2
42	JINPFDTDP516	Neddie 134PCL 100/16 (for591)	1
43	JINPFDTDP521	Neddie 134PCL 130/21 (for591)	1
44	JINPFDTDP516	Neddie 134PCL 100/16 (for592)	2
45	JINPFDTDP521	Neddie 134PCL 130/21 (for592)	2
46	JINPFNA0127	Washer Φ4	2
47	JINPFNA1115	Bearing bush assy	1

5. 机头零件(4)
Needle head parts (4)

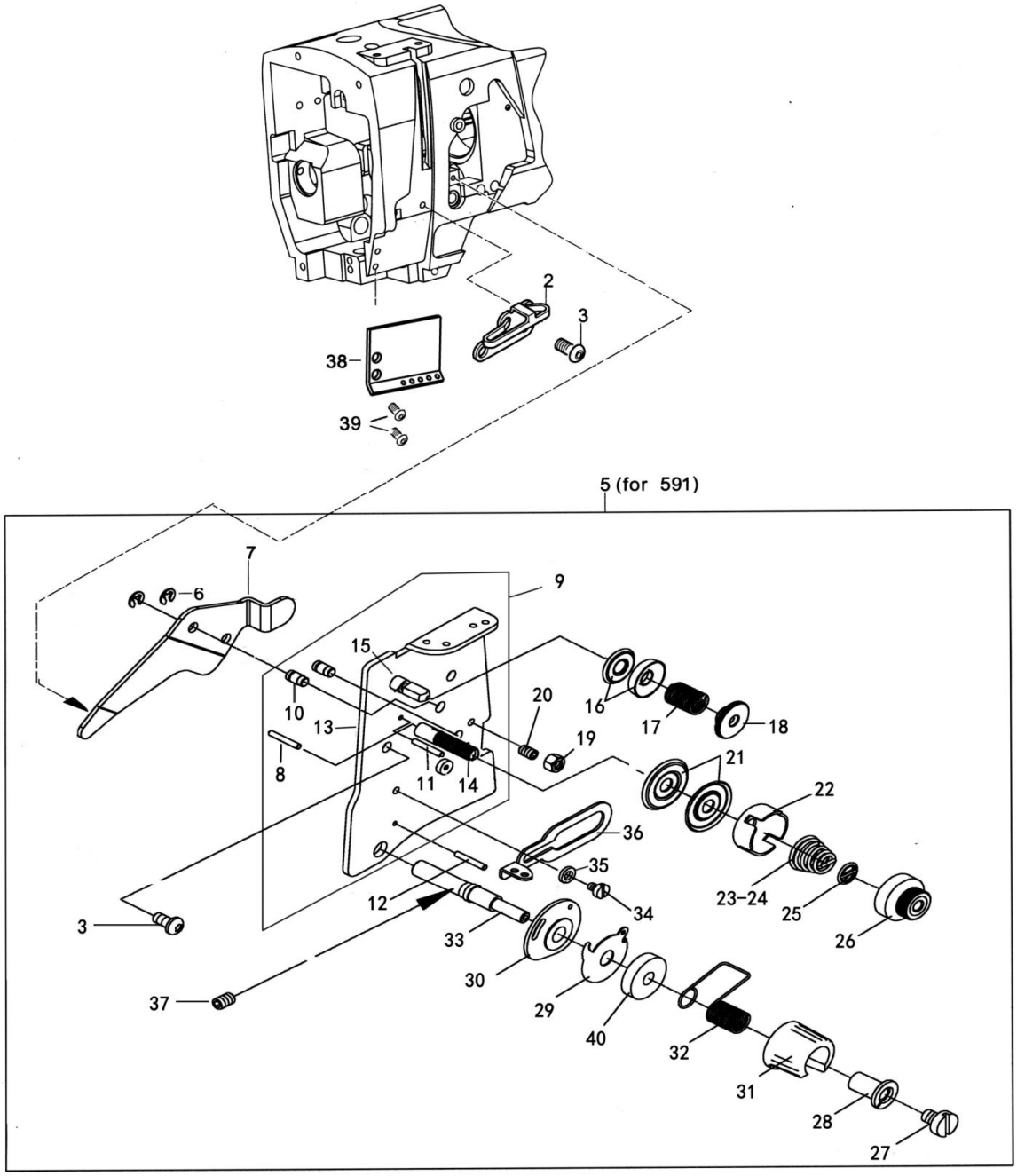

Per.No	Part No	Description	Qty
02	JINPFNA0502	Left and right wire hook	1
03	JINPFNA0102	Screw M5X10	2
05	JINPFNA050501	Conductor holder (for 591)	1
06	JINPFNA0506	Collar	2
07	JINPFNA0507	Spring guard	1
08	JINPFNA0508	Pin	1
09	JINPFNA0509	Clamp plate assembly	1
10	JINPFNA0510	Screw pin 5x8	2
11	JINPFNA0511	Screw pin 5x20	1
12	JINPFNA0512	Screw pin 5x8	1
13	JINPFNA0513	Bobbin winder tension disc	1
14	JINPFNA0514	Screw	1
15	JINPFNA0515	Screw	1
16	JINPFNA0516	Thred tension disk	2
17	JINPFNA0517	Spring	1
18	JINPFNA0518	Screw M6	1
19	JINPFNA0519	Screw M4	1
20	JINPFNA0520	Screw M4x8	1
21	JINPFNA0521	Thread guide plate	2
22	JINPFNA0522	Split line spring plate	1
23	JINPFNA0523	Split line spring (for —M Model)	1
24	JINPFNA0524	Split line spring (for —H Model)	1
25	JINPFNA0525	Spring plate	1
26	JINPFNA0526	NUT	1
27	JINPFNA0527	Screw M3X8	1
28	JINPFNA0528	Pipe casing	1
29	JINPFNA0529	Balance thread guide	1
30	JINPFNA0530	Partition board	1
31	JINPFNA0531	Limit nut	1
32	JINPFNA0532	Spring	1
33	JINPFNA0533	Thread guide spindle	1
34	JINPFNA0534	Screw M4x6	1
35	JINPFNA0535	Washer Φ4	1
36	JINPFNA0536	Thread guide plate	1
37	JINPFNA0403	Screw	1
38	JINPFNA0538	Large crossing hook	1
39	JINPFNA0539	Screw M4x 10	2
40	JINPFNA0540	Heel	1

6. 机头零件(5)
Needle head parts (5)

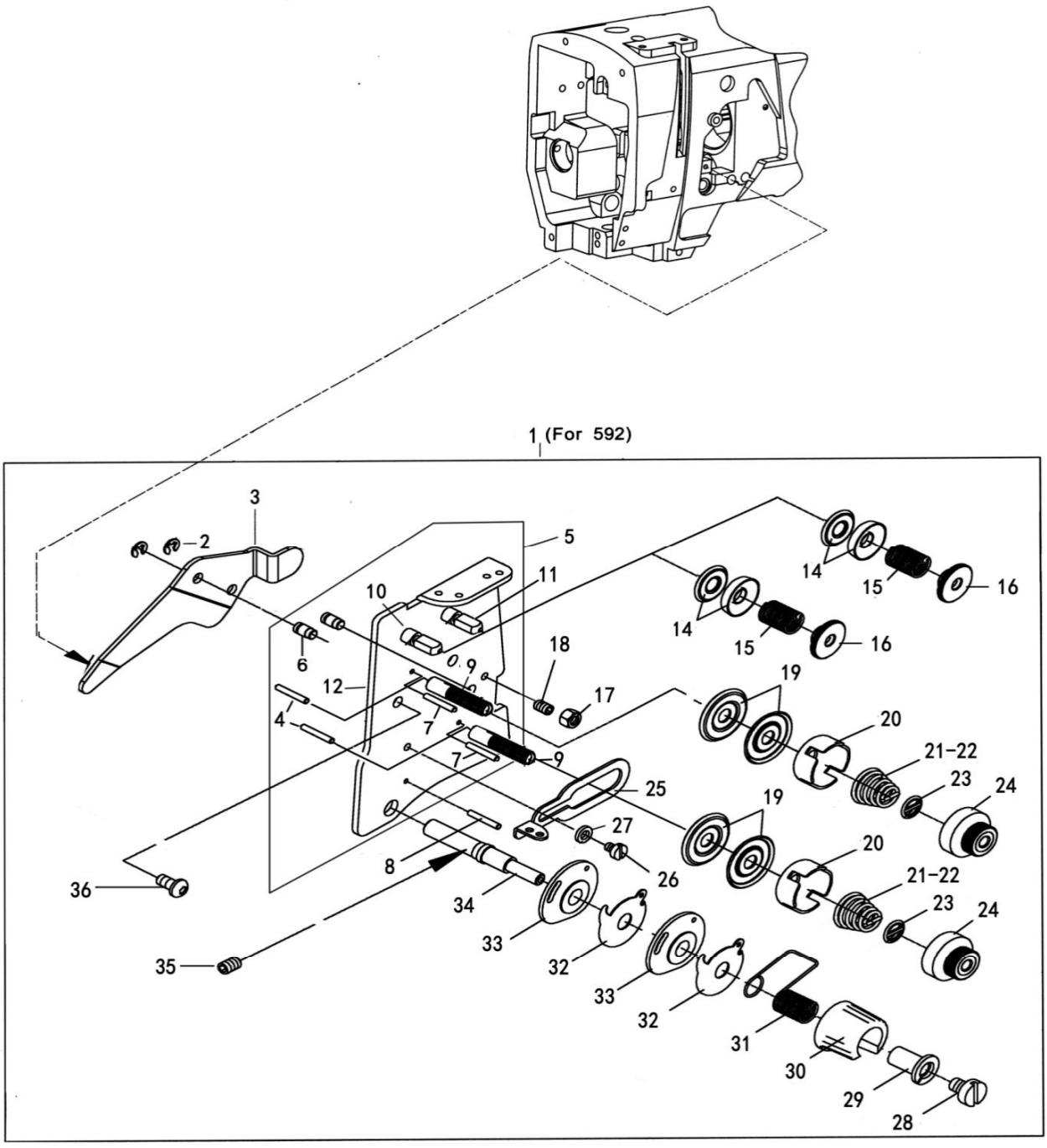

Per.No	Part No	Description	Qty
01	JINPFNB060101	Conductor holder (for592)	1
02	JINPFNB0602	Collar	2
03	JINPFNB0603	Spring guard	1
04	JINPFNB0604	Pin	1
05	JINPFNB0605	Bobbin winder tension disc asm	1
06	JINPFNB0606	Screw pin 5x8	2
07	JINPFNB0607	Screw pin 2X20	2
08	JINPFNB0608	Screw pin 2x8	1
09	JINPFNB0609	Screw	2
10	JINPFNB0610	Screw	1
11	JINPFNB0611	Screw	1
12	JINPFNB0612	Bobbin winder tension disc	1
14	JINPFNB0614	Thred tension disk	4
15	JINPFNB0615	Spring	2
16	JINPFNB0616	Nut M6	2
17	JINPFNB0617	Nut M4	1
18	JINPFNB0618	Screw M4X8	1
19	JINPFNB0619	Thread guide plate	4
20	JINPFNB0620	Split line spring plate	2
21	JINPFNB0621	Split line spring (for —M Model)	2
22	JINPFNB0622	Split line spring (for —H Model)	2
23	JINPFNB0623	Spring plate	2
24	JINPFNB0624	Nut	2
25	JINPFNB0625	Thread guide plate	1
26	JINPFNB0626	Screw M4x6	1
27	JINPFNB0627	Washer Φ4	1
28	JINPFNB0628	Screw M3x8	1
29	JINPFNB0629	Pipe casing	1
30	JINPFNB0630	Limit nut	1
31	JINPFNB0631	Spring	1
32	JINPFNB0632	Balance thread guide	1
33	JINPFNB0633	Partition board	1
34	JINPFNB0634	Adjustment axle	1
35	JINPFNB0635	Screw	1
36	JINPFNB0636	Screw M5x 10	1

7. 机臂零件(1)
Arm parts (1)

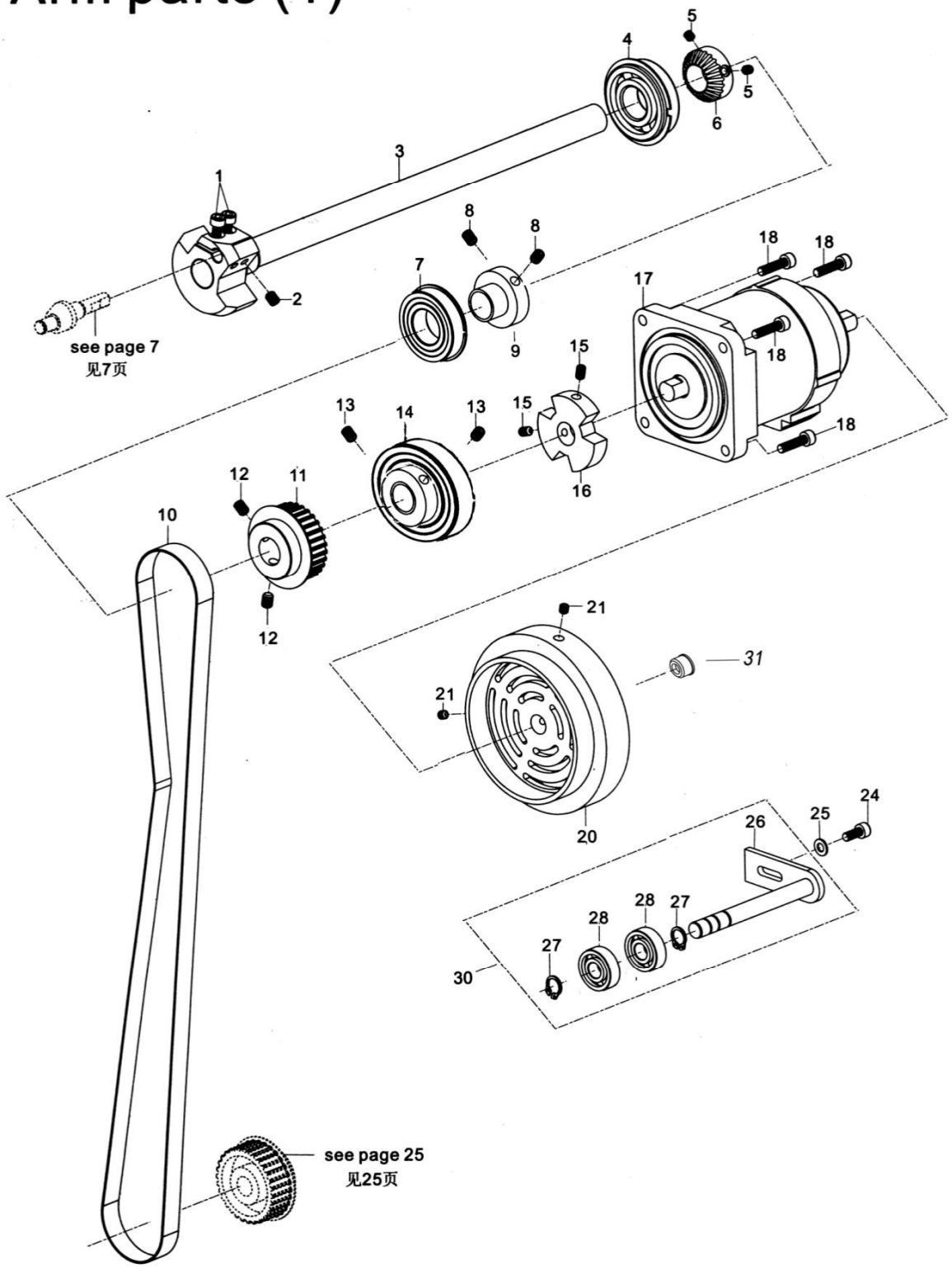

Per.No	Part No	Description	Qty
01	JINPFNA0131	Screw M5x10	2
02	JINPFNA0713	Screw M6x0.75X7	1
03	JINPFNA0703	Counter weight assy	1
04	JINPFNA0704	Bearing 6204ZZNR	1
05	JINPFNA0304	Screw M5x5	2
06	JINPFNA0706	Pulley	1
07	JINPFNA0707	Synchronous belt	1
08	JINPF1790S0539	Screw M6X8	2
09	JINPFNA0709	Rear bush	1
10	JINPFNA0710	Synchronous belt	1
11	JINPFNA0711	Spindle Pulley	1
12	JINPFNA0303	Screw M6X8	2
13	JINPFNA0713	Screw M6X0.75X8	2
14	JINPFNA0714	BearingS6907RZ	1
15	JINPFNA0713	Screw M5X8	2
16	JINPFNA0716	Coupling rubber	1
17	JINPFNA0717	Electric machinery	1
18	JINPFNA0718	Screw M5x 18.5	4
20	PFNA072001	Uppper wheel	1
21	JINPFNA0303	Screw M5X5	2
24	JINPFNA0724	Screw M5X12	1
25	JINPFNA0725	Washer Φ5	1
26	JINPFNA0726	Seal part	1
27	JINPFNA0727	Collar	2
28	JINPFNA0728	Bearing 6000ZZ	1
29	JINPFNA0729	Bearing bush	1
30	JINPFNA0730	Synchronous belt compression	1
31	JINPF9820Z85	Oil dam	1

8. 机臂零件(2)
Arm parts (2)

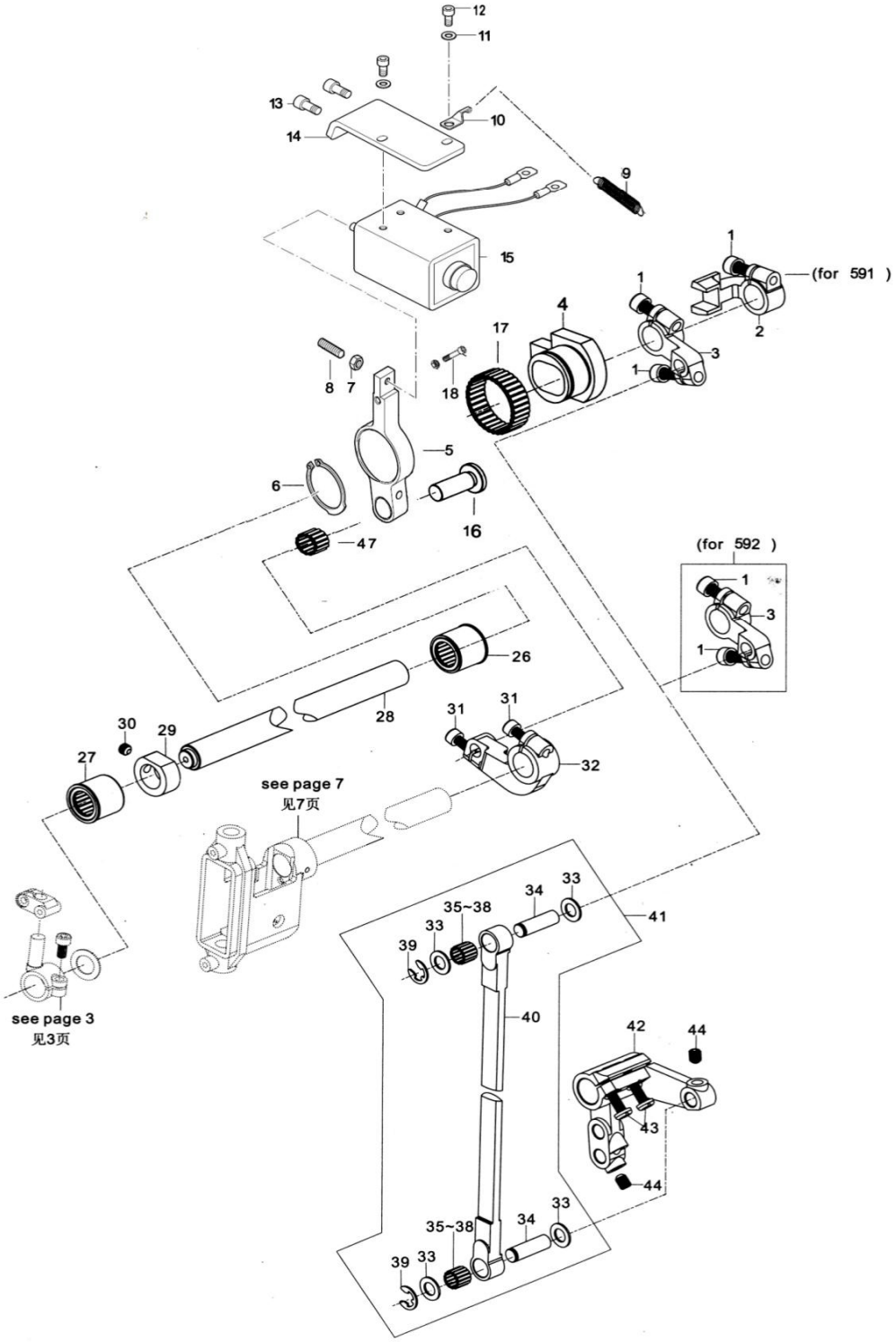

Per.No	Part No	Description	Qty
01	JINPFNA0801	Screw M6 x16	3
02	JINPFNA0802	Crank slider groove	1
03	JINPFNA0803	Crank	1
04	JINPFNA0804	Crank slider	1
05	JINPFNA0805	Crank	1
06	JINPFNA0806	Thrust collar	1
07	JINPFNA0116	NUT	1
08	JINPFNA0808	Screw	1
09	JINPFNA0809	Spring	1
10	JINPFNA0810	Spring hook	1
11	JINPFNA0127	CollarM4	2
12	JINPFNA0325	ScrewM4X8	2
13	JINPFNA0131	ScrewM5X10	2
14	JINPFNA0814	Plate	1
15	JINPFNA0815	Swing span electromagnet	1
16	JINPFNA0816	Needle pitch adjusting screw pin	1
17	JINPFNA0817	Bearing	1
18	JINPFNA0818	Screw M4x40	1
26	JINPFNA1114	Needle bar rock shaft bush	1
27	JINPFNA1115	Needle bar rock shaft bush	1
28	JINPFNA0828	Upper shaft assy	1
29	JINPFNA0408	Thrust collar	1
30	JINPFNA0229	Screw M6x0.75x5	1
31	JINPFNA0724	Screw M5x12	2
32	JINPFNA0832	Crank	1
33	JINPFNA0833	Washer Φ8	4
34	JINPFNA0834	Shaft	2
35	JINPFNA0835	Needle bearing	2
36	JINPFNA0836	Needle bearing	2
37	JINPFNA0837	Needle bearing	2
38	JINPFNA0838	Needle bearing	2
39	JINPFNA0839	Thrust collar	2
40	JINPFNA0840	Link shaft	1
41	JINPFNA0841	Link shaft assy	1
42	JINPFNA0842	Link	1
43	JINPFNA0843	Screw M5x12	2
44	JINPFNA0229	Screw M6x0.75x8	2
47	JINPFNA1327	needle bearing	1

9. 机臂零件(3)
Arm parts (3)

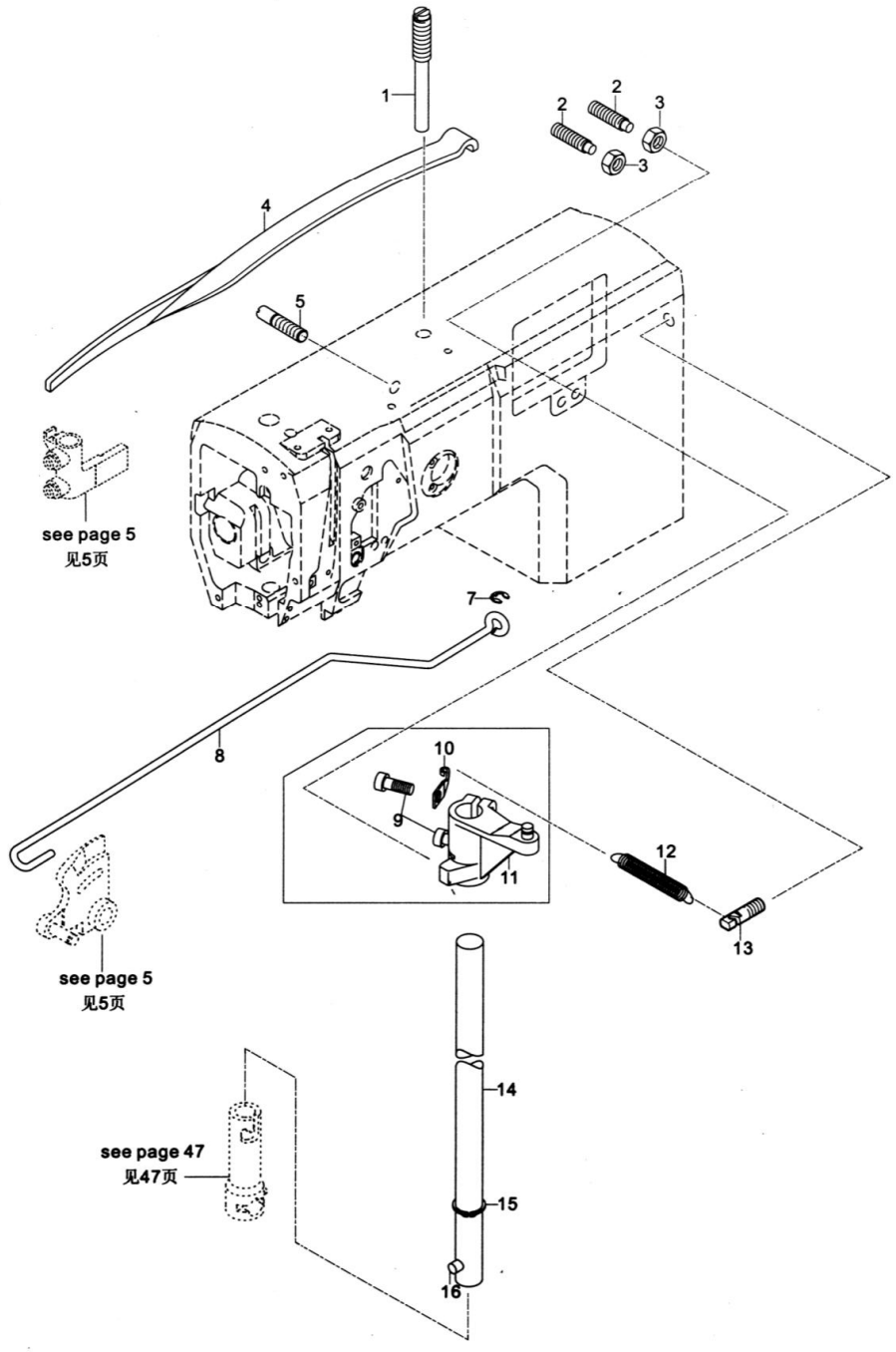

Per.No	Part No	Description	Qty
01	JINPFNA0901	Spring pin	1
02	JINPFNA0902	Screw M6x30	2
03	JINPFNA0903	Nut M6	2
04	JINPFNA0904	compress lever	1
05	JINPFNA0905	Screw M6x7.2	1
07	JINSCJ1004	collar	1
08	JINPFNA0908	Connecting rod	1
09	JINPFNA0724	Screw M5x12	2
10	JINPFNA0810	Spring Board	1
11	JINPFNA0911	Crank	1
12	JINPFNA0912	Spring	1
13	JINPFNA0913	Screw M6x8	1
14	JINPFNA0914	Moving axis assm	1
15	JINSCJ1018	Collar	1
16	JINPFNA0915	Pin 5x14	1

10. 机臂零件(4)
Arm parts (4)

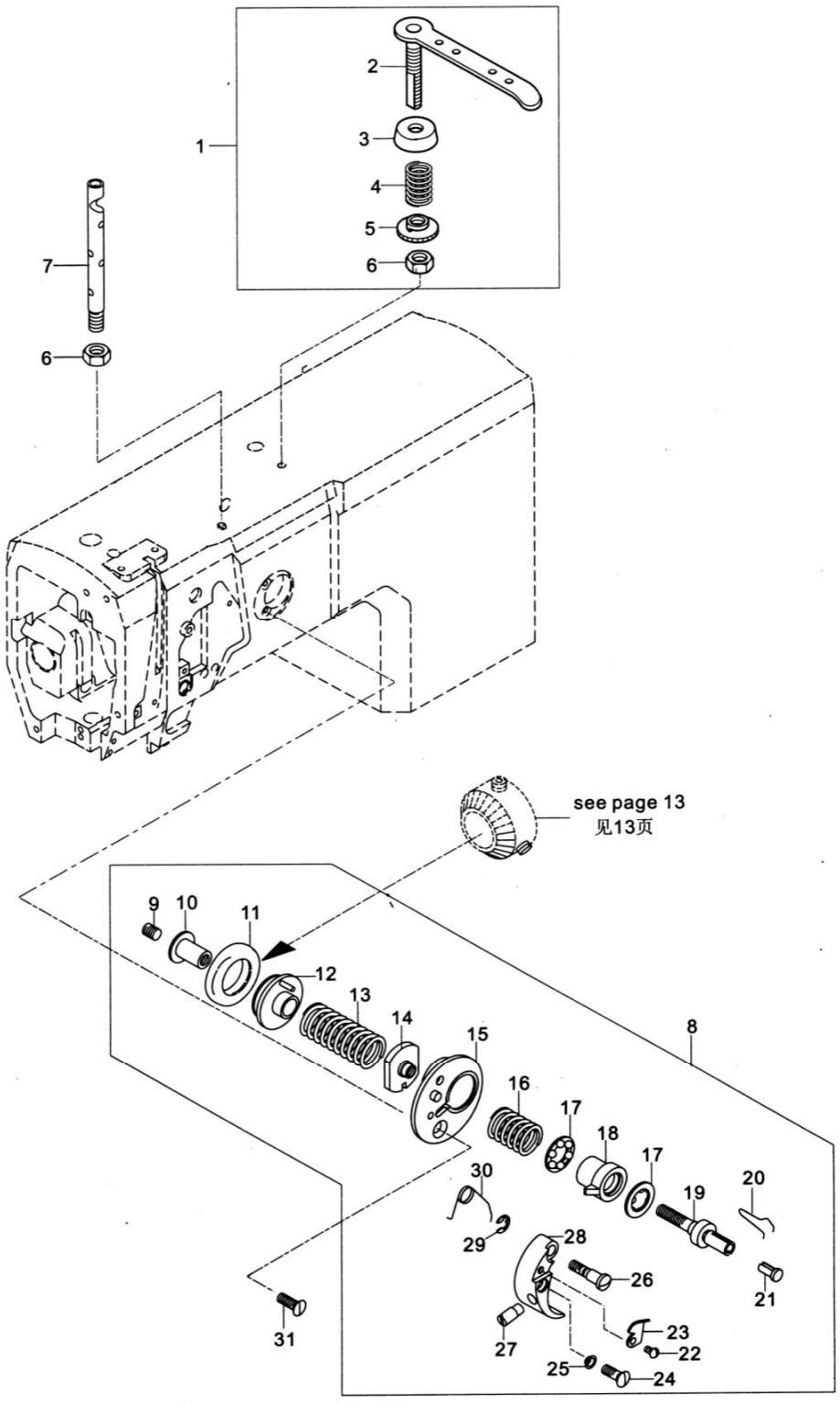

Per.No	Part No	Description	Qty
01	JINPFNA1001	Thread guide	1
02	JINPFNA1002	Thread crossing column assy	1
03	JINPFNA1003	Thred tension disk	1
04	JINPFNA1004	Spring	1
05	JINPFNA1005	Nut M6	1
06	JINPFNA1006	Nut M6	1
07	JINPFNA1007	Thread crossing column	1
08	JINPFNA1008	Bobbin winder unit	1
09	JINPFNA1009	Screw M5x5	1
10	JINPFNA1010	Screw plate	1
11	JINPFNA1011	Ring	1
12	JINPFNA1012	Bobbin winder shaft compl.	1
13	JINPFNA1013	Compression spring	1
14	JINPFNA1014	Compression spring seat	1
15	JINPFNA1015	Retaining ring assy	1
16	JINPFNA1016	Comressing spring	1
17	JINPFNA1017	Edge bearing	2
18	JINPFNA1018	Shaft bush	1
19	JINPFNA1019	Shaft	1
20	JINPFNA1020	Shuttle spring	1
21	JINPFNA1021	Shuttle bush	1
22	JINPFNA1022	Screw	1
23	JINPFNA1023	Knife	1
24	JINPFNA1024	Screw M3x8	1
25	JINPFNA1025	Washer	1
26	JINPFNA1026	Screw M4x4	1
27	JINPFNA1027	Pin	1
28	JINPFNA1028	Plate	1
29	JINPFNA1029	Collar	1
30	JINPFNA1030	Spring	1
31	JINPF1310D137	Screw M4x8	1

11. 底板零件(1)
Bedplate psrts (1)

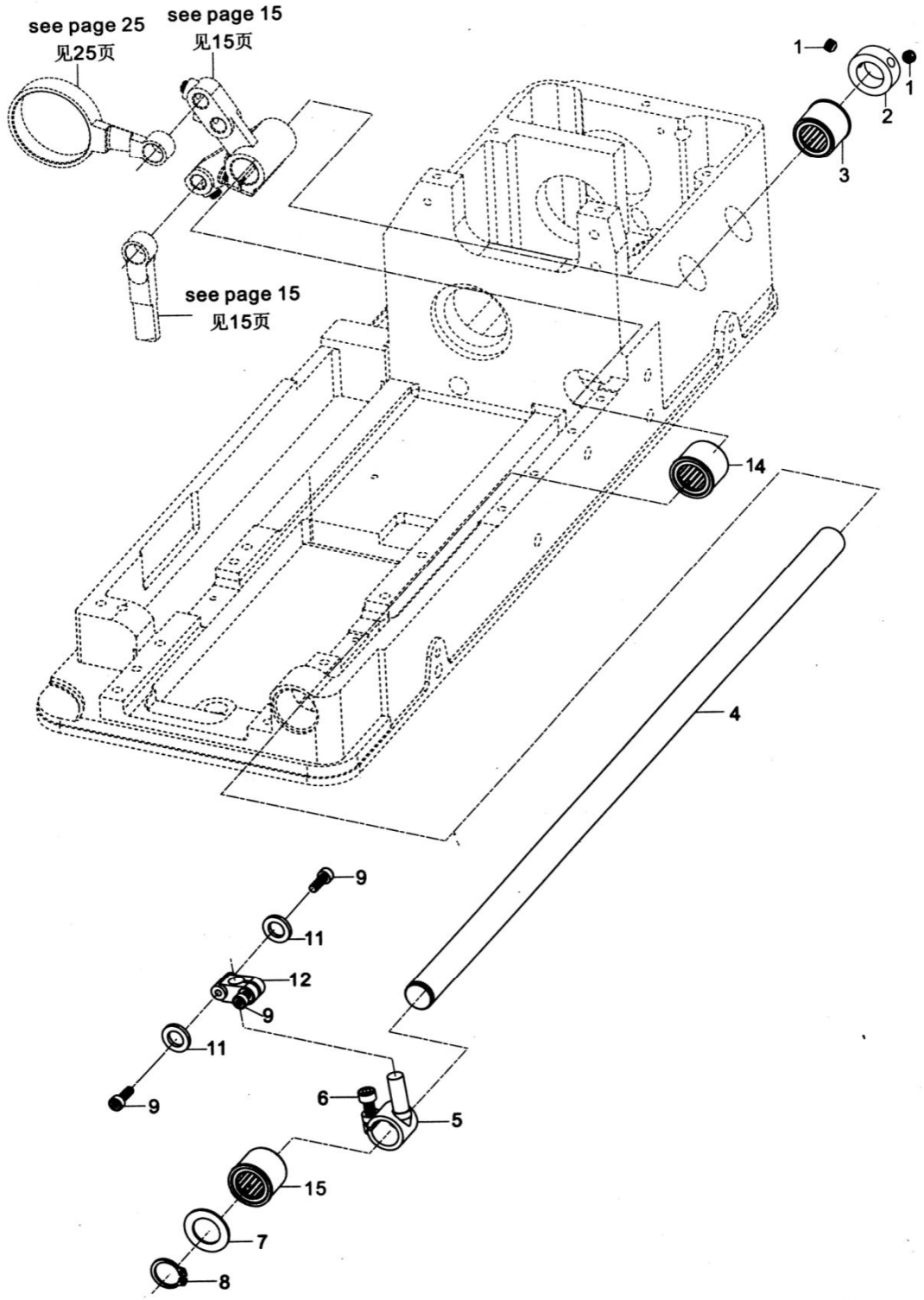

Per.No	Part No	Description	Qty
01	JINPFNA0229	Screw M6x0.75x5	2
02	JINPFNA1102	Shaft collar	1
03	JINPFNA1103	Bearing bush assy	1
04	JINPFNA1104	Transport major axis	1
05	JINPFNA0223	Universal coupling head	1
06	JINPFNA0131	Screw M5x10	1
07	JINPFNA0218	Washer	1
08	JINSCJ1019	Collar	1
09	JINPFNA0203	Screw M4x 10	1
11	JINPFNA0224	Oil reservoir gasket	4
12	JINPFNA0220	Base frame	1
14	JINPFNA1114	Bearing bush assy	1
15	JINPFNA1115	Bearing bush assy	1

12. 底板零件(2)
Bedplate psrts (2)

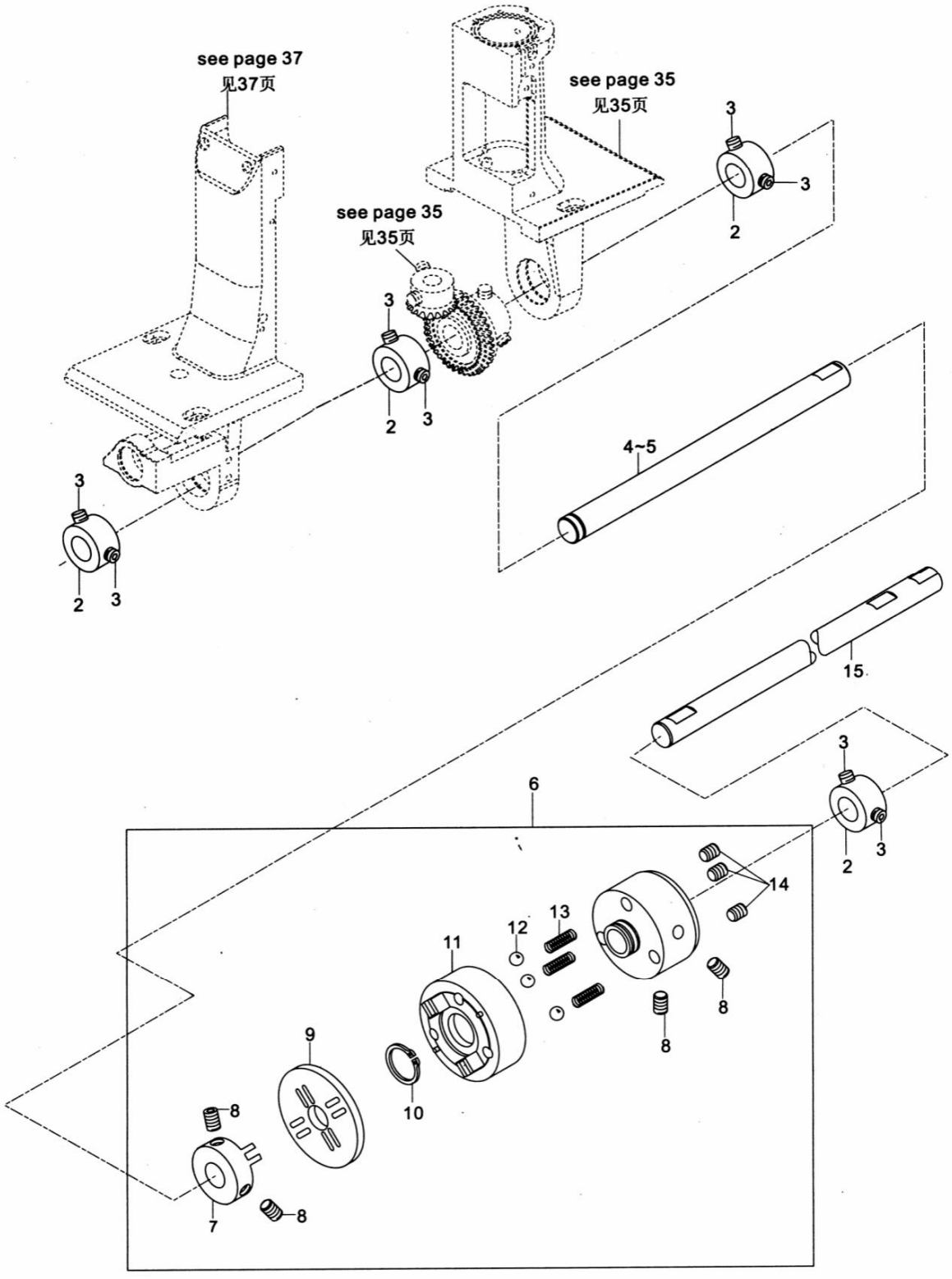

Per.No	Part No	Description	Qty
02	JINPFNA1202	shaft collar	4
03	JINPF1790S0539	Screw M5x5	8
04	JINPFNA1204	Universal coupling spindle A (for 591)	1
05	JINPFNB1205	Universal coupling spindle (for 592)	1
06	JINPFNA1206	Clutch	1
07	JINPFNA1207	Clutch minor connector	1
08	JINPFNA0713	Screw M6x0.75x8	2
09	JINPFNA1208	Clutch gusset	1
10	JINPFNA1209	Collar	1
11	JINPFNA1210	Clutch connector	1
12	JINPFNA1211	Steel ball	3
13	JINPFNA1212	spring	3
14	JINPFNA1213	Screw M6x0.75x6	3
15	JINPFNA1215	Lower shaft	1

13. 底板零件(3)
Bedplate psrts (3)

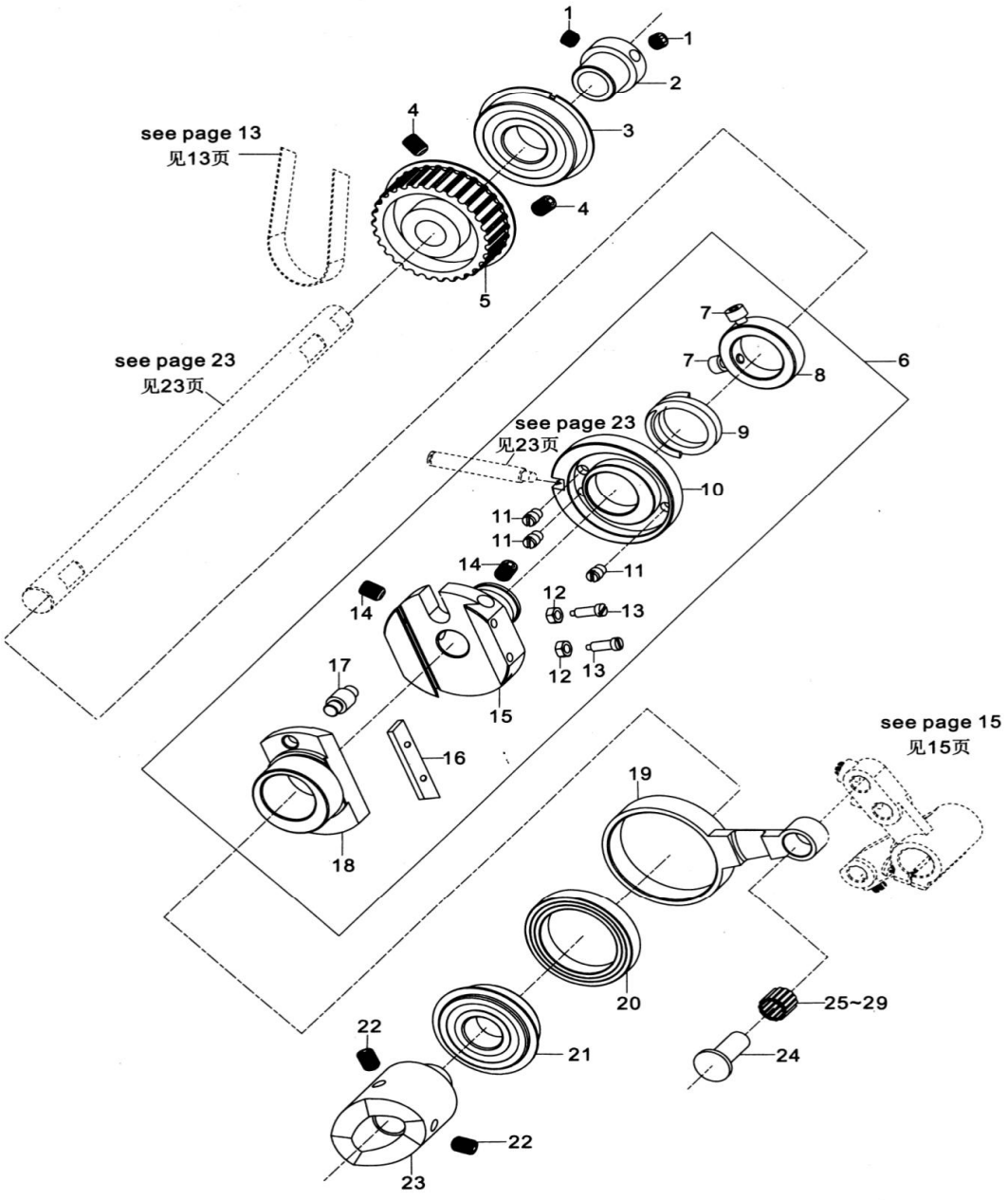

Per.No	Part No	Description	Qty
01	JINPFNA0304	Screw M6x5	2
02	JINPFNA1302	Lower shaft rear bush	1
03	JINPFNA1303	Bearing	1
04	JINPFNA0303	Screw M6x8	2
05	JINPFNA1305	Lower shaft sprocket	1
06	JINPFNA1306	Guage regulator component	1
07	JINPFNA1307	Screw M4x8	2
08	JINPFNA1308	Collar	1
09	JINPFNA1309	compression spring	1
10	JINPFNA1310	Adjustment wheel	1
11	JINPFNA1311	Screw	3
12	JINPFNA1312	Nut	2
13	JINPFNA1313	Screw	2
14	JINPFNA0303	Screw M6x8	2
15	JINPFNA1314	Slider groove	1
16	JINPFNA1315	Adjustment plate	1
17	JINPFNA1316	Pin	1
18	JINPFNA1317	Slider	1
19	JINPFNA1318	Connecting rol	1
20	JINPFNA1320	Bearing	1
21	JINPFNA1321	Bearing	1
22	JINPFNA0713	Screw M6x0.75x8	2
23	JINPFNA1323	Thread trimming cam	1
24	JINPFNA1324	Connecting pin	1
25	JINPFNA1325	Needle bearing	1
26	JINPFNA1551	Needle bearing	1
27	JINPFNA1552	Needle bearing	1
28	JINPFNA1553	Needle bearing	1
29	JINPFNA1554	Needle bearing	1

14. 底板零件(4)
Bedplate psrts (4)

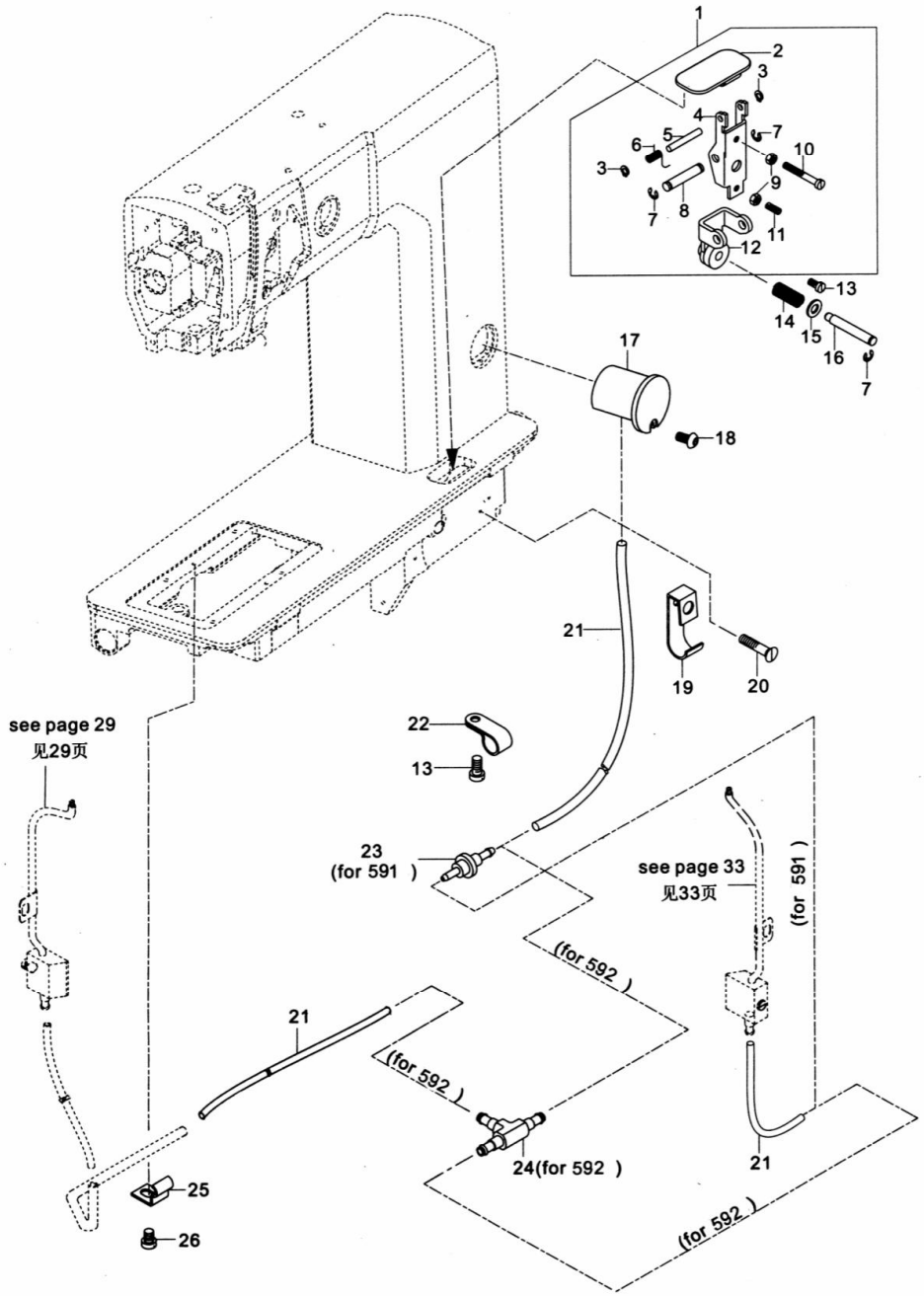

Per.No	Part No	Description	Qty
01	JINPFNA1401	Stitch adjusting assembly	1
02	JINPFNA1402	Adjusting plate	1
03	JINPFNA1403	Ccollar	2
04	JINPFNA1404	Angle adjustment	1
05	JINPFNA1405	Pin 4x30	1
06	JINPFNA1406	Spring	1
07	JINSCJ1004	Collar	1
08	JINPFNA1407	Shaft	1
09	JINPFNA1408	Nut M4	2
10	JINPFNA1409	Screw M4x 32	1
11	JINPFNA1410	Screw M4x 10	1
12	JINPFNA1411	Adjusting plate	1
13	JINPFNA0203	Screw M4x8	2
14	JINPFNA1414	Compress spring	1
15	JINPFNA1415	Washer Φ6	1
16	JINPFNA1416	Adjusting pin	1
17	JINPFNA1417	Oil tank assy	1
18	JINPFNA0120	Screw M4x6	1
19	JINPFNA1419	Oil pipe clip	1
20	JINPFNA2112	Screw M4x14	1
21	JINPFNA0121	Oil tube	2
22	JINPFNA0132	Oil pipe clip	1
23	JINPFNA1423	Terminall	1
24	JINPFNB1424	Terminall	1
25	JINPFNB1425	Oil tube support	1
26	JINPFNB1426	Screw M4x5	1

15. 旋梭左支座(1)
Hook post , left(1)

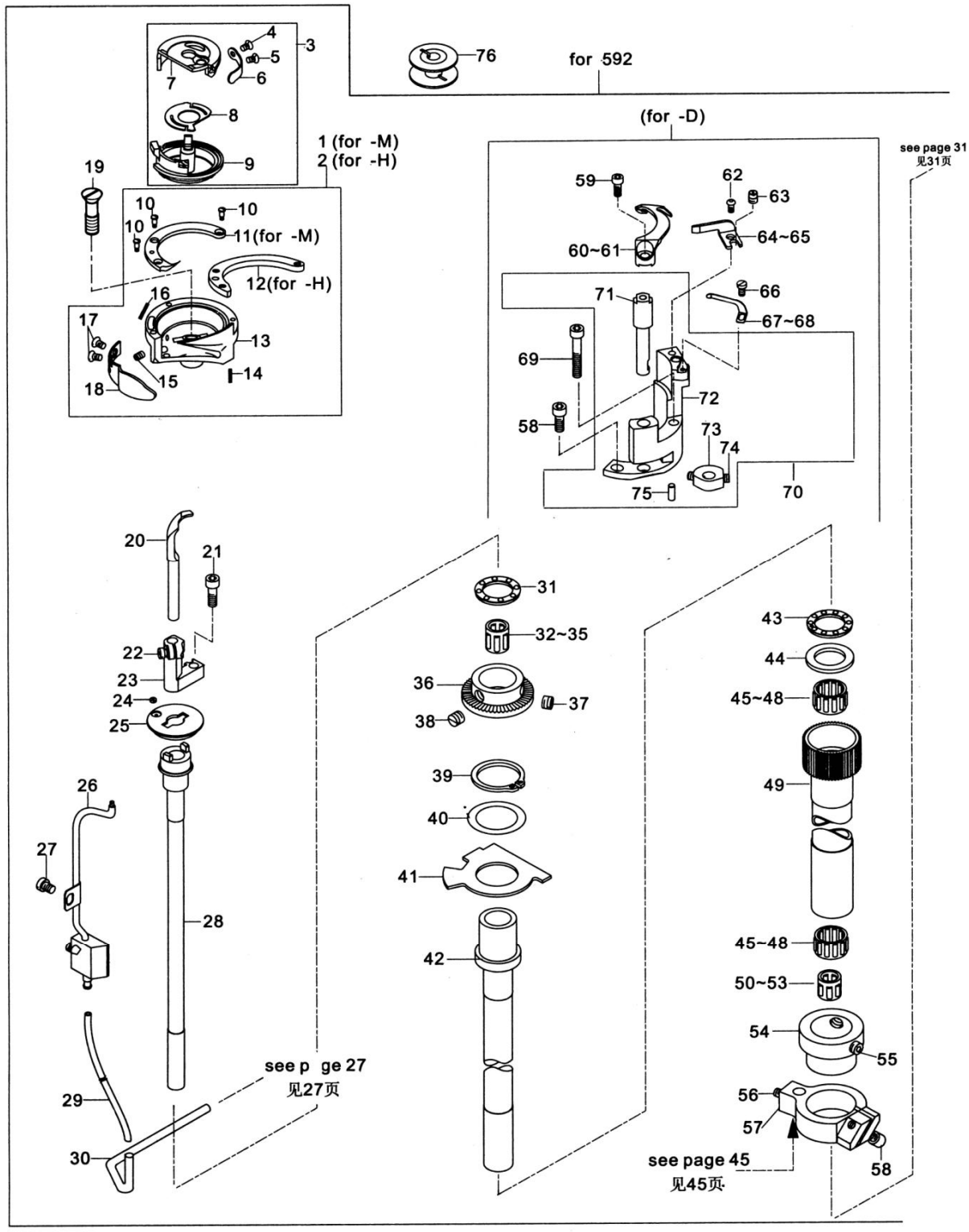

Per.No	Part No	Description	Qty
01	JINPFNA1701	Import Hook-thickness	1
02	JINPFNA1702	Domestic Hook-thickness	1
03	JINPFNA1703	Bobbin case asm	1
04	JINPFNA1704	Screw	1
05	JINPFNA1705	Screw	1
06	JINPFNA1706	Plate spring	1
07	JINPFNA1707	Hook-top	1
08	JINPFNA1708	Spring	1
09	JINPFNA1709	Shuttle wan	1
10	JINPFNA1710	Screw	3
11	JINPFNA1711	Shuttle’ tongue （for-M ）	1
12	JINPFNA1712	Shuttle’ tongue （for -H ）	1
13	JINPFNA1713	Bobbin case	1
14	JINPFNA1714	Wick	1
15	JINPFNA1715	Oil felt wick	1
16	JINPFNA1716	Screw M3x4	1
17	JINPFNA1717	Screw M2.6x4	2
18	JINPFNA1718	Needle protected plate	1
19	JINPFNA1719	Screw M5x20	1
20	JINPFNA1720	Positioning finger	1
21	JINPFNA0203	Screw M4x’12	1
22	JINPFNA0325	Screw M4x6	1
23	JINPFNA1723	Positioning finger plate	1
24	JINPFNA1724	O ring	2
25	JINPFNA1725	hook fid	1
26	JINPFNA1726	Rubber assy	1
27	JINPFNA1426	Screw M4x5	1
28	JINPFNB1528	Hook transmission mandrel	1
29	JINPFNA0121	Oil felt	1
30	JINPFNB1530	Copper tubing	1
31	JINPFNA1730	Small end bearing	1
32	JINPFNA1731	Needle bearing	1
33	JINPFNA1732	Needle bearing	1
34	JINPFNA1733	Needle bearing	1
35	JINPFNA1734	Needle bearing	1
36	JINPFNB1536	Feeding wheel	1
37	JINPFNB1537	Screw M6x0.75x3	1
38	JINPF1310B08	Screw M6x0.75>c3	1
39	JINPFNA1735	Collar	1
40	JINPFNA1736	Collar	1
41	JINPFNA1737	Armor pieces	1
42	JINPFNB1542	592 feeding drive shaft	1
43	JINPFNB1543	592 end bearing	1
44	JINPFNB1544	Washer	1
45	JINPFNB1545	Needle bearing	2
46	JINPFNB1546	Needle bearing	2
47	JINPFNB1547	Needle bearing	2
48	JINPFNB1548	Needle bearing	2
49	JINPFNB1549	574 hook shaft	1
50	JINPFNB1550	Needle bearing	1
51	JINPFNB1551	Needle bearing	1
52	JINPFNB1552	Needle bearing	1
53	JINPFNB1553	Needle bearing	1
54	JINPFNA1739	Retainging ring	1
55	JINPFNA0229	Screw M6X0.75X5	2
56	JINPFNA0304	Screw M5x5	1
57	JINPFNB1557	Crank	1
58	JINPFNA0203	Screw M4x10	2
59	JINPFNA0203	Screw M4x10	1
60	JINPFNA1746	Movable knife(Made in Taiwan)	1
61	JINPFNA1747	Movable knife （ Made in China ）	1
62	JINPFNA0120	Screw M4x6	1
63	JINPFNA1749	Eccentric pin	1
64	JINPFNA1750	Fixed knife (Made in Taiwan)	1
65	JINPFNA1751	Fixed knit© （ Made in China ）	1
66	JINPFNA1752	Screw M2.5x3	1
67	JINPFNA1753	Wire clip (Made in Taiwan)	1
68	JINPFNA1754	Wire clip （ Made in China ）	1
69	JINPFNA0118	Screw M4x25	1
70	JINPFNA1756	Moveble knife lever	1
71	JINPFNA1757	Knife holder	1
72	JINPFNA1758	Fixed knife bracket seat	1
73	JINPFNA1759	Transmission gear	1
74	JINPFNA1760	Screw M4x4	2
75	JINPFNA1761	Pin 3x10	1
76	JINPFNA1762	Bobbin	1

16. 旋梭左支座(2)
Hook post , left(2)

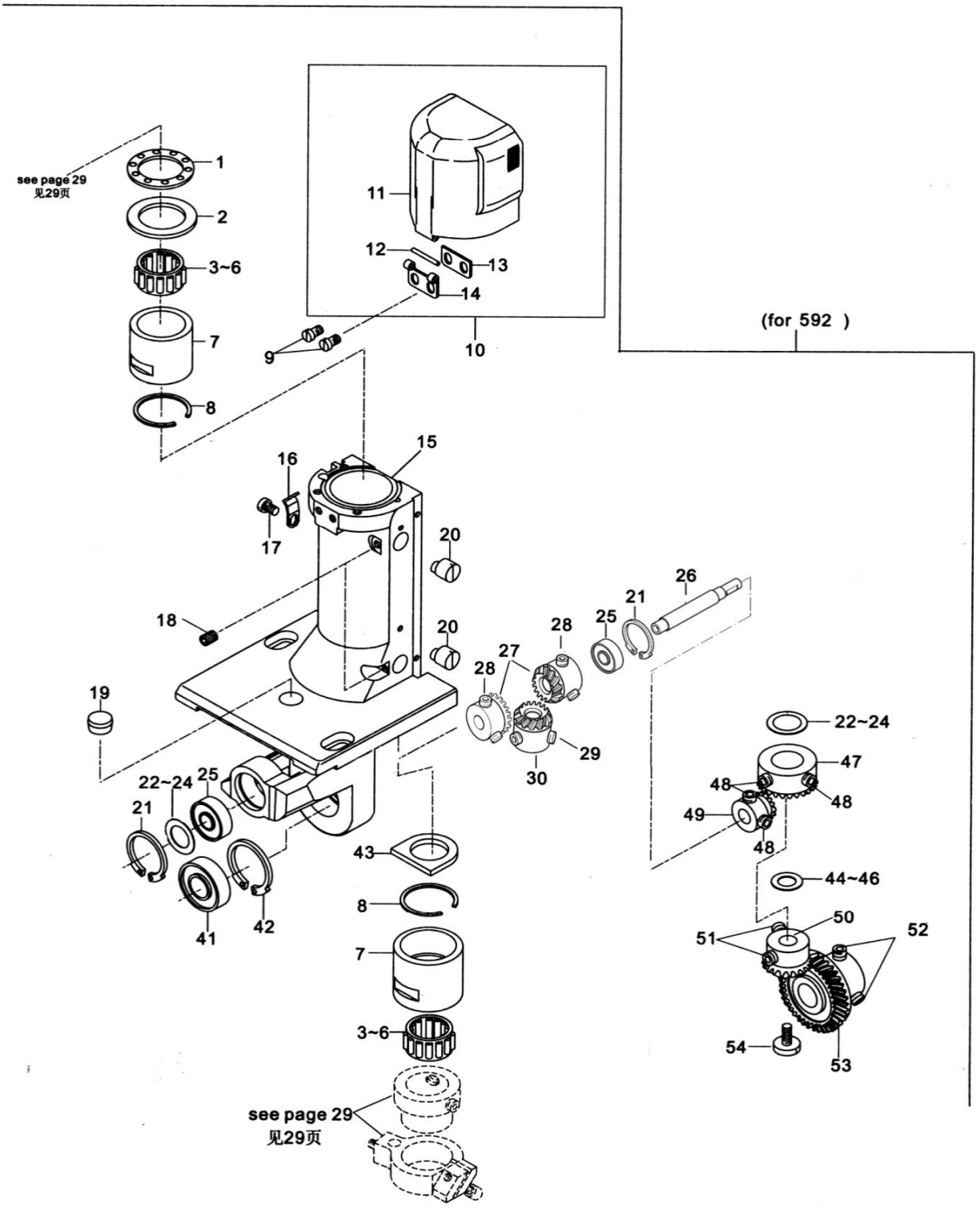

Per.No	Part No	Description	Qty
01	JINPFNA1811	End bearing	1
02	JINPFNA1812	Washer	1
03	JINPFNA1813	Needle bearing	2
04	JINPFNA1813	Needle bearing	2
05	JINPFNA1814	Needle bearing	2
06	JINPFNA1815	Needle bearing	2
07	JINPFNA1817	Hook shaft sleeve	2
08	JINPFNA1818	Collar	2
09	JINPFNA0120	Screw M4x8	2
10	JINPFNA1801	Hook shield components	1
11	JINPFNA1802	Hook shield	1
12	JINPFNA1803	Pin	1
13	JINPFNA1804	Washer	1
14	JINPFNA1805	Shield driving seat	1
15	JINPFNB1615	Hook the left bearing	1
16	JINPFNA1819	Spring plate	1
17	JINPFNA1426	Screw M4x6	1
18	JINPFNA1810	Screw M4x6	2
19	JINPFNA1906	Oil plug	1
20	JINPFNA1809	Eccentric pin	2
21	JINPFNA1908	Collar	2
22	JINPFNA1909	Washer	1
23	JINPFNA1910	Washer	1
24	JINPFNA1911	Washer	1
25	JINPFNA1912	Bearing	2
26	JINPFNB1626	Feeding drive shaft	1
27	JINPFNB1627	Feeding gear	2
28	JINPFNB1628	Screw	4
29	JINPFNB1629	Screw	2
30	JINPFNB1630	Screw	1
41	JINPFNA1823	Bearing	1
42	JINPFNA1822	Collar	1
43	JINPFNA1824	Oil felt	1
44	JINPFNB1644	Washer	3
45	JINPFNB1645	Washer	3
46	JINPFNB1646	Washer	3
47	JINPFNB1647	592 feeding drive gear components II	1
48	JINPFNA0229	Screw M6x0.75x5	4
49	JINPFNB1649	592 feeding drive gear I	1
50	JINPFNA1827	The hook driving gear II	1
51	JINPFNA0229	Screw M6x0.75x5	2
52	JINPFNA0229	Screw M6x0.75x6	2
53	JINPFNA1830	The hook driving gear components 11	1
54	JINPFNB1654	Screw M4x 10	1

17. 旋梭右支座(1)
Hook post , right(1)

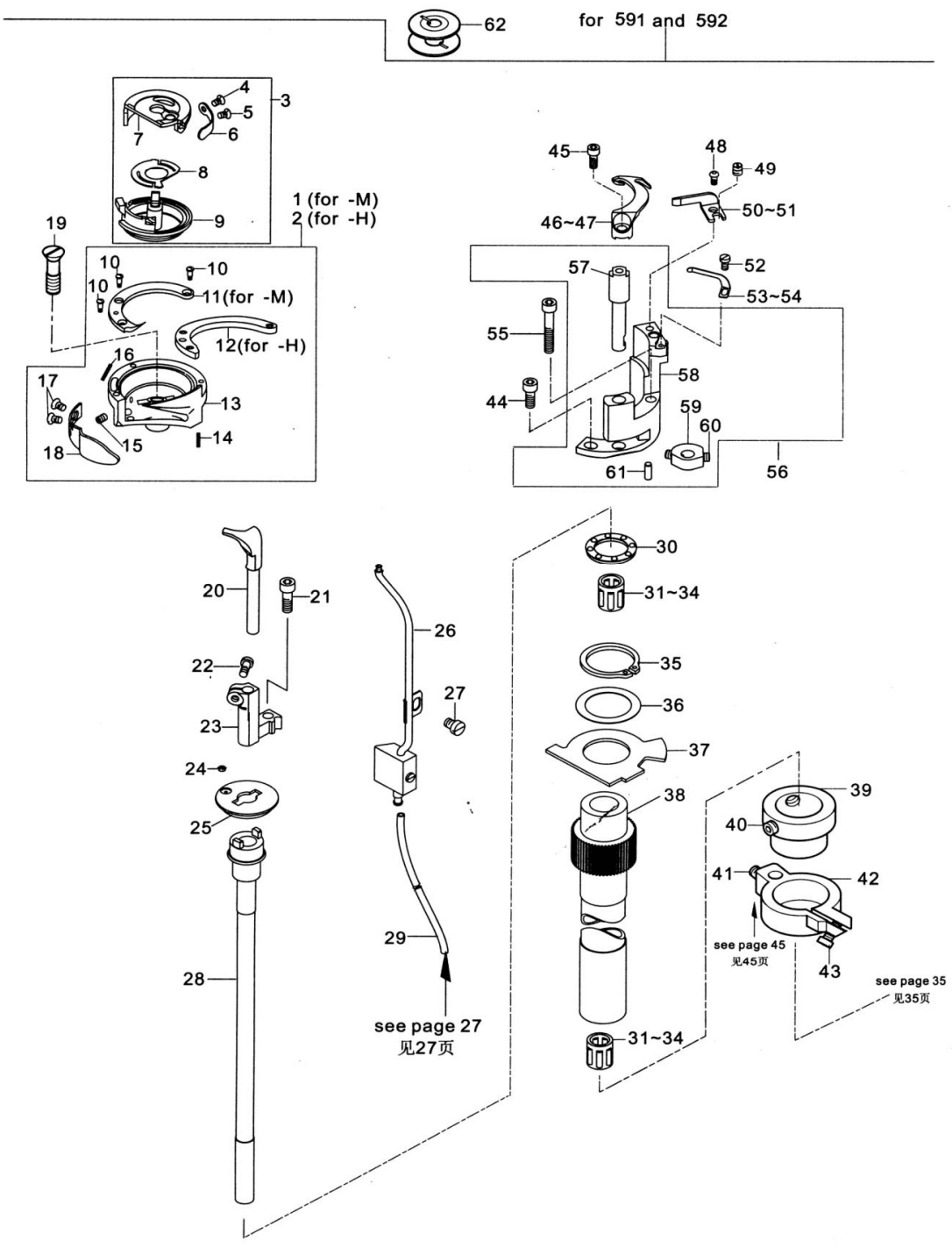

Per.No	Part No	Description	Qty
01	JINPFNA1701	Import Hook-thickness	1
02	JINPFNA1702	Domestic Hook-thickness	1
03	JINPFNA1703	Bobbin case asm	1
04	JINPFNA1704	Screw	1
05	JINPFNA1705	Screw	1
06	JINPFNA1706	Spring plate	1
07	JINPFNA1707	Hook-top	1
08	JINPFNA1708	Spring	1
09	JINPFNA1709	Shuttle wan	1
10	JINPFNA1710	Screw	3
11	JINPFNA1711	Shuttle’ tongue (for-M)	1
12	JINPFNA1712	Shuttle’ tongue (for -H)	1
13	JINPFNA1713	Bobbin case	1
14	JINPFNA1714	Wick	1
15	JINPFNA1715	Oil felt wick	1
16	JINPFNA1716	Screw M3x4	1
17	JINPFNA1717	M2.6x4	1
18	JINPFNA1718	Needle protected plate	1
19	JINPFNA1719	Screw M5x20	1
20	JINPFNA1720	Positioning finger	1
21	JINPF1790S0326	Screw M4x12	1
22	JINPFNA0325	Screw M4x6	1
23	JINPFNA1723	Positioning finger plate	1
24	JINPFNA1724	O ring	2
25	JINPFNA1725	hook lid	1
26	JINPFNA1726	Rubber assy	1
27	JINPFNA1426	Screw M4x5	1
28	JINPFNA1728	Hook transmission mandrel	1
29	JINPFNA0121	Oil felt	1
30	JINPFNA1730	End bearing	1
31	JINPFNA1731	Needie bearing	2
32	JINPFNA1732	Needle bearing	2
33	JINPFNA1733	Needle bearing	2
34	JINPFNA1734	Needle bearing	2
35	JINPFNA1735	Collar	1
36	JINPFNA1736	Washer	1
37	JINPFNA1737	Armor pieces	1
38	JINPFNA1738	hook shaft	1
39	JINPFNA1739	Collar	1
40	JINPFNA0229	Screw M6x0.75x5	2
41	JINPFNA0304	Screw M5x5	1
42	JINPFNA1742	Crank	1
43	JINPFNA0131	Screw M4x10	1
44	JINPFNA0203	Screw M4x10	2
45	JINPFNA0203	Screw M4x10	1
46	JINPFNA1746	Movable knife (Made in Taiwan)	1
47	JINPFNA1747	Movable knife (Made in China)	1
48	JINPFNA1748	Screw M4x6	1
49	JINPFNA1749	Eccentric pin	1
50	JINPFNA1750	Fixed knife (Made in Taiwan)	1
51	JINPFNA1751	Fixed knife (Made in China)	1
52	JINPFNA1752	Screw M2.5x3	1
53	JINPFNA1753	Wire clip CMade in Taiwan)	1
54	JINPFNA1754	Wire clip (Made in China)	1
55	JINPFNA0118	Screw M4x25	1
56	JINPFNA1756	Moveble knife lever	1
57	JINPFNA1757	Knife holder	1
58	JINPFNA1758	Fixed knife bracket seat	1
59	JINPFNA1759	Transmission gear	1
60	JINPFNA1760	Screw M4x4	2
61	JINPFNA1761	Pin 3x10	1
62	JINPFNA1762	Bobbin	1

18. 旋梭右支座(2)
Hook post , right(2)

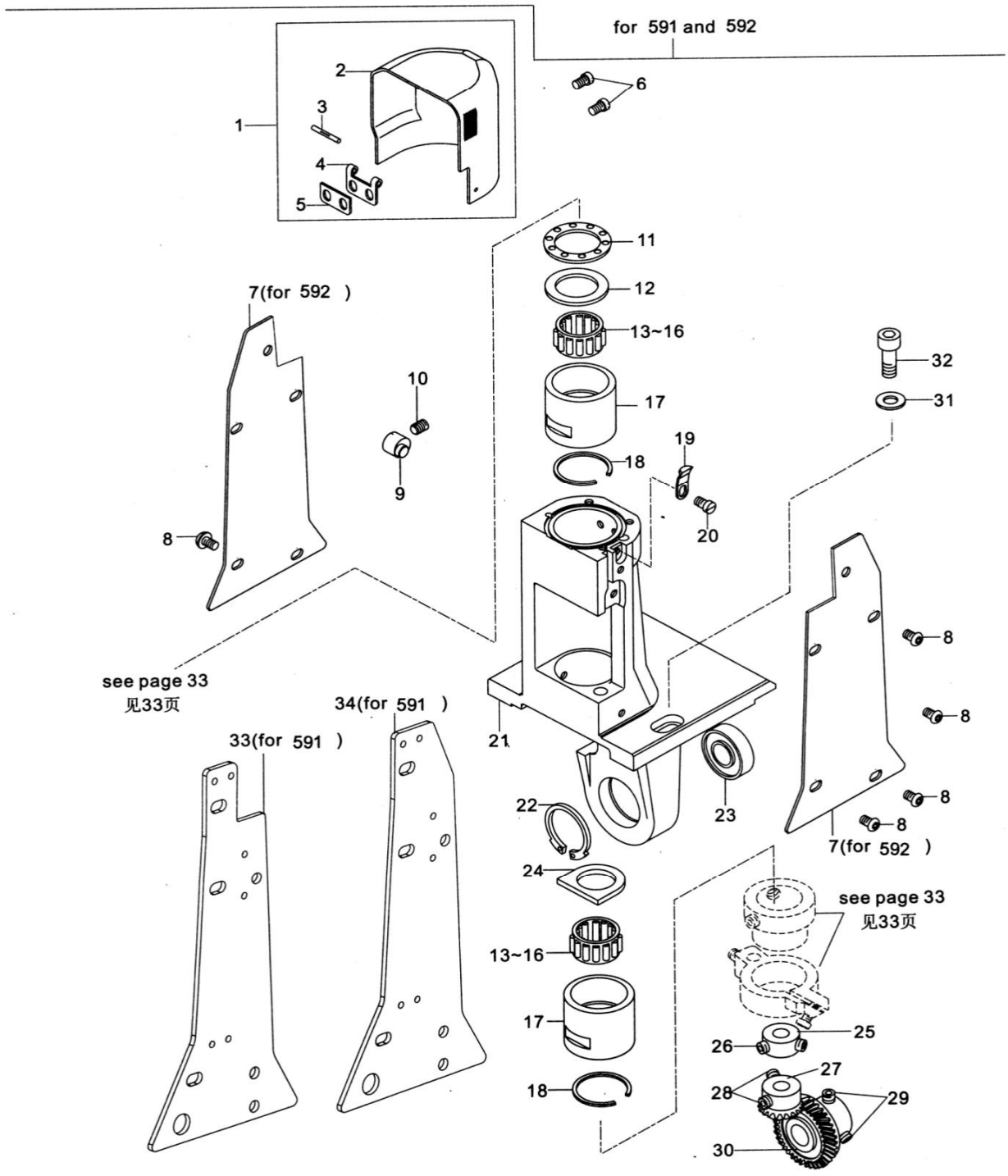

Per.No	Part No	Description	Qty
01	JINPFNA1801	Hook shield components	1
02	JINPFNA1802	Hook shield	1
03	JINPFNA1803	Pin	1
04	JINPFNA1804	Shield driving seat	1
05	JINPFNA1805	Washer	1
06	JINPFNA0539	Screw M4x8	2
07	JINPFNB1807	Double needle plate measuring (for592)	2
08	JINPFNA0120	Screw M4x6	10
09	JINPFNA1809	Eccentric pin	2
10	JINPFNA1810	Screw M4x6	2
11	JINPFNA1811	End bearing	1
12	JINPFNA1812	Washer	1
13	JINPFNA1813	Needle bearing	2
14	JINPFNA1814	Needle bearing	3
15	JINPFNA1815	Needle bearing	4
16	JINPFNA1816	Needle bearing	5
17	JINPFNA1817	Hook shaft sleeve	2
18	JINPFNA1818	Collar	2
19	JINPFNA1819	Spring plate	1
20	JINPFNA1426	Screw M4x6	1
21	JINPFNA1821	Hook the right bearing	1
22	JINPFNA1822	Collar	1
23	JINPFNA1823	Bearing 6001ZZ	1
24	JINPFNA1824	Oil felt	1
25	JINPFNA1825	Collar	1
26	JINPFNA0229	Screw M6x0.75x5	2
27	JINPFNA1827	The hook driving gear II	1
28	JINPFNA0229	Screw M6x0.75x5	2
29	JINPFNA0229	Screw M6x0.75x6	2
30	JINPFNA1830	The hook driving gear I	1
31	JINPFNA1831	Washer Φ6	2
32	JINPFNA0801	Screw M6x 16	2
33	JINPFNA1833	One needle plate measuring (for 591)	1
34	JINPFNA1834	Plate measuring (for 591)	1
40	JINPFNA1840	Needle bearing	2
41	JINPFNA1841	Needle bearing	2

19. 送料支座
Feed wheel post , left

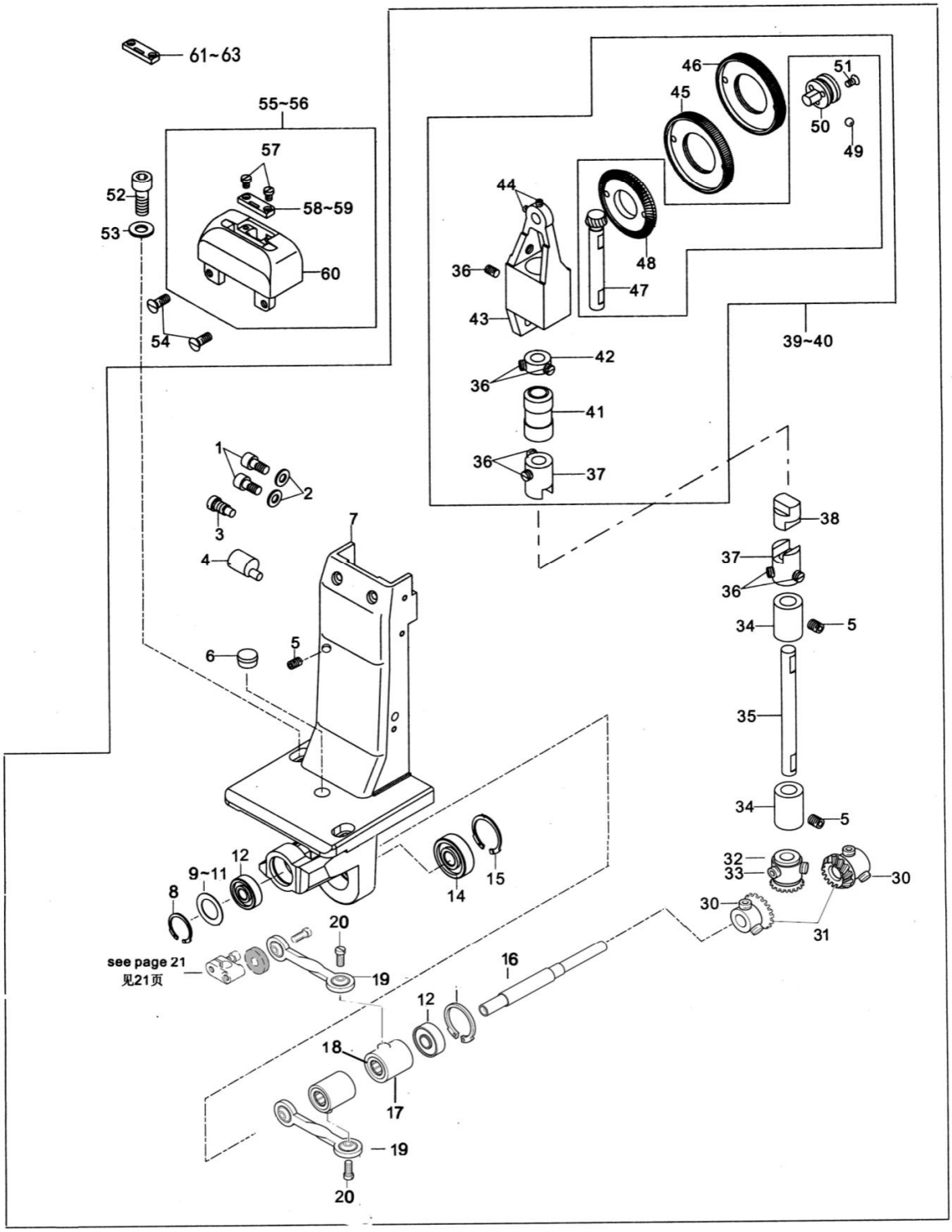

Per.No	Part No	Description	Qty
01	JINPFNA0724	Screw M5x12	2
02	JINPFNA0725	Washer Φ5	2
03	JINPFNA1903	Screw M6x8	1
04	JINPFNA1904	Pin	1
05	JINPFNA1810	Screw M4x6	3
06	JINPFNA0128	Oil wick	1
07	JINPFNA1907	Feeding support D paint.	1
08	JINPFNA1908	Collar	2
09	JINPFNA1909	Washer	2
10	JINPFNA1910	Washer	3
11	JINPFNA1911	Washer	3
12	JINPFNA1912	Bearing 608ZZ	2
14	JINPFNA1823	Bearing 6001 ZZ	1
15	JINPFNA1822	Colar	1
16	JINPFNA1916	Feeding drive shaft	1
17	JINPFNA1917	Bearing seat asm	2
18	JINPFNA0243	One way bearing	2
19	JINPFNA0226	Ball connecting rod component	2
20	JINPFNA0325	Screw	4
30	JINPFNA0229	Screw M6x0.7x6	2
31	JINPFNA1931	Feeding mechanism of gear I	2
32	JINPFNA1932	Feeding mechanism of gear II	1
33	JINPFNA0229	Screw M6x0.75x5	2
34	JINPFNA1934	Axle sleeve	2
35	JINPFNA1935	Feeding transmission shaft	1
36	JINPFNA0304	Screw M5x5	2
37	JINPFNA1937	Coupling bushing	1
38	JINPFNA1938	Connecting block	1
39	JINPFNA1939	Straight tooth feeding mechanism	1
40	JINPFNA1940	Knurling tooth feeding mechanism	1
41	JINPFNA1941	Axle sleeve	1
42	JINPFNA1942	Collar	1
43	JINPFNA1943	Feeding mechanism of bearing	1
44	JINPFNA1944	Screw M3x4	2
45	JINPFNA1945	Feeding straight tooth	1
46	JINPFNA1946	Knurling tooth feed tray	1
47	JINPFNA1947	The feed driving bevel gear I	1
48	JINPFNA1948	The feed driving bevel gear II	1
49	JINPFNA1949	Steel ball Φ2	23
50	JINPFNA1950	The Connecting block assembly	1
51	JINPFNA1951	Screw M2.5x4	3
52	JINPFNA0801	Screw M6x 16	2
53	JINPFNA1831	Washer Φ6	2
54	JINPFNA1031	Screw M4x8	2
55	JINPFNA1955	Single needle plate assembly (-M)	1
56	JINPFNA1956	Single needle plate assembly (-H)	1
57	JINPFNA1957	Screw M2x3	2
58	JINPFNA1958	Small needle plate -thin (for -M)	1
59	JINPFNA1959	Small needle plate -thick (for -H)	1
60	JINPFNA1960	needle plate seat	1
61	JINPFNA1961	Small needle plate -thick (1.6*3.7)	1
62	JINPFNA1962	Small needle plate -thick (1.8*3.9)	1
63	JINPFNA1963	Small needle plate -thick (2.3*4.7)	1

20. 送料轮托盘
Feed wheel mounting plate

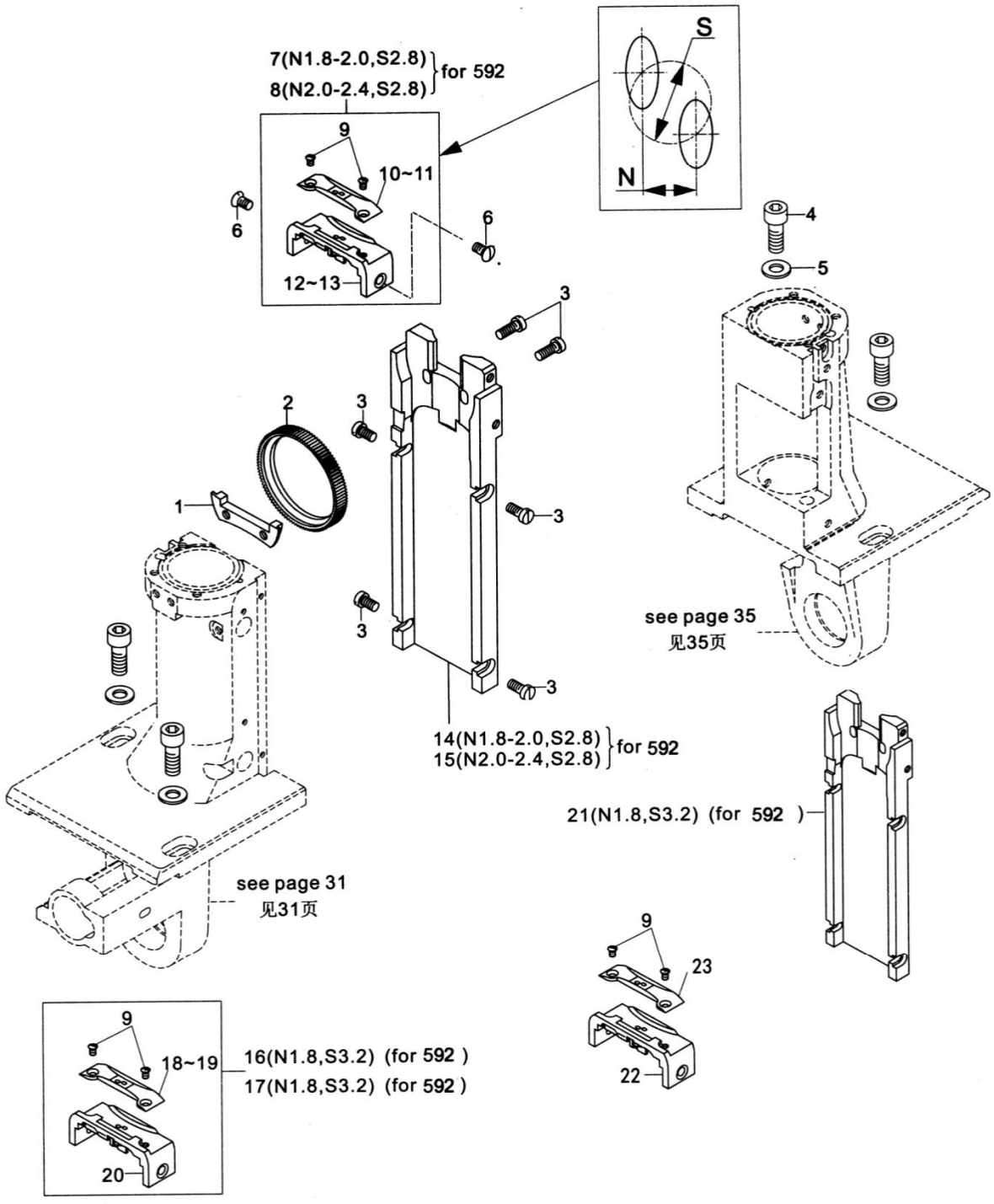

Per.No	Part No	Description	Qty
01	JINPFNB2001	Feeding wheel adjusting block	1
02	JINPFNB2002	Feeding wheel	1
03	JINPFNB2003	Screw M4x 10	6
04	JINPFNA0801	Screw M6x10	4
05	JINPFNA1831	Washer Φ6	4
06	JINPFNB2006	Screw M4x6	2
07	JINPFNB2007	Double needle plate assembly(N1.2-1.8)	1
08	JINPFNB2008	Double needle plate assembly(N2.0-2.4)	1
09	JINPFNB2009	Screw M3x 3.2	2
10	JINPFNB2010	Small double needle plate(N1.2-1.8)	1
11	JINPFNB2011	Small double needle plate(N2.0-2.4)	1
12	JINPFNB2012	Double needle plate cover(N1.2-1.8)	1
13	JINPFNB2013	Double needle plate cover(N2.0-2.4)	1
14	JINPFNB2014	Double needle plate cover seat(N1.2-1.8)	1
15	JINPFNB2015	Double needle plate cover seat(N2.0-2.4)	1
16	JINPFNB2016	Double needle plate assembly(N1.8)	1
17	JINPFNB2017	Double needle plate assembly(N1.8)	1
18	JINPFNB2018	Small double needle plate(N1.8)	1
19	JINPFNB2019	Small double needle plate(N1.8)	1
20	JINPFNB2020	Double needle plate cover(N1.8)	1
21	JINPFNB2021	Double needle plate cover seat (N1.8)	1
22	JINPFNB2022	Double needle plate assembly (2.2-2.6)	1
23	JINPFNB2023	Small double needle plate(N2.2-2.6)	1

21. 倒缝装置
Backtacking mechanism

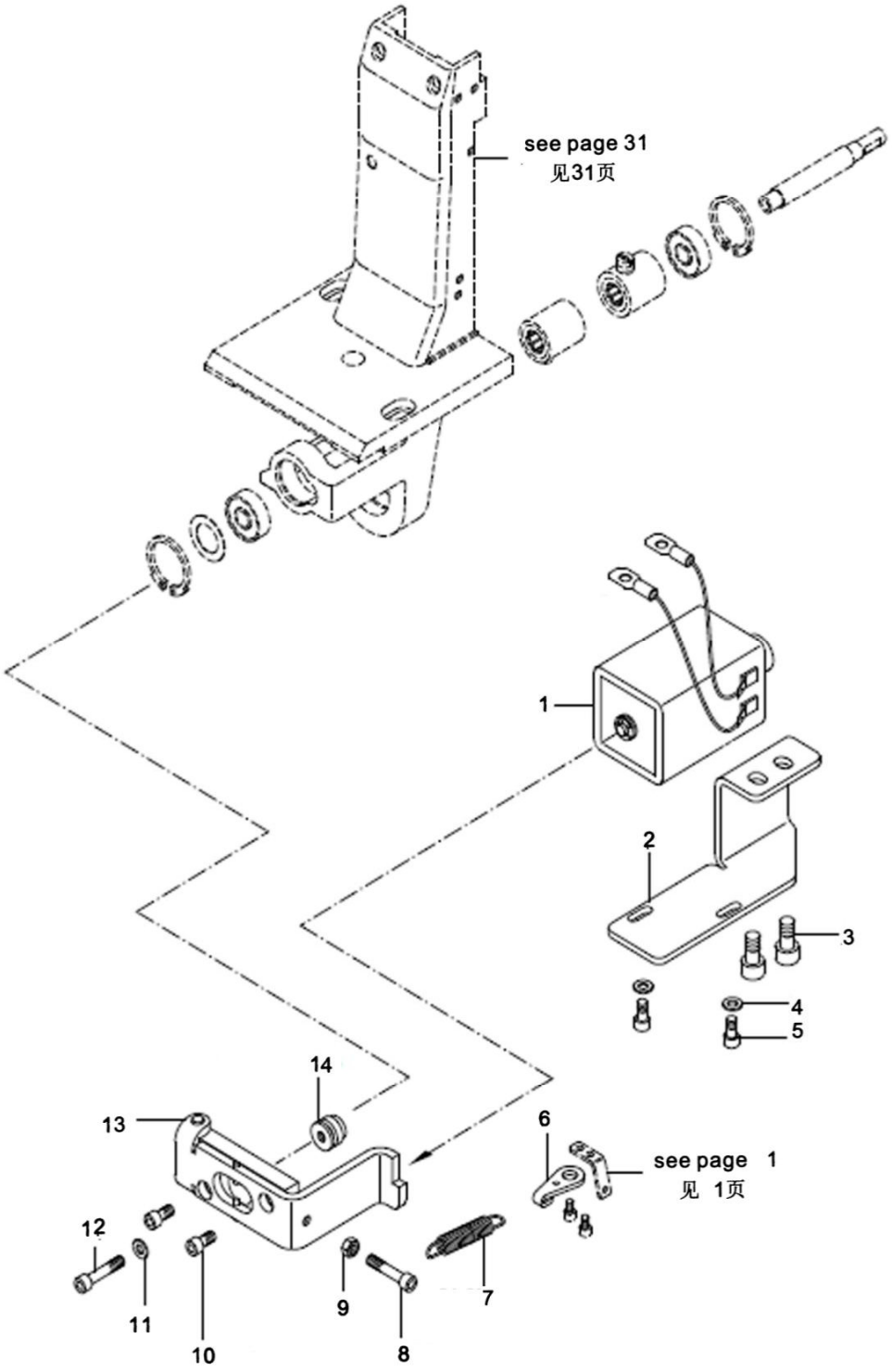

Per.No	Part No	Description	Qty
01	JINPFNA2101	Backstitch electromagnet	1
02	JINPFNA2102	Electromagnet bracket	1
03	JINPFNA0106	Screw M6x 10	2
04	JINPFNA0127	Washer Φ4	2
05	JINPFNA0325	Screw M4x6	2
06	JINPFNA2106	Spring Board	1
07	JINPFNA2107	Reset spring	1
08	JINPFNA2108	Screw	1
09	JINPFNA2109	Nut M5	1
10	JINPFNA0203	Screw	2
11	JINPFNA0127	Washer Φ4	1
12	JINPFNA2112	Screw	1
13	JINPFNA2113	Backstitch transmission	1
14	JINPFNA2114	Backstitch Connector	1

22. 倒缝装置
Backtacking mechanism

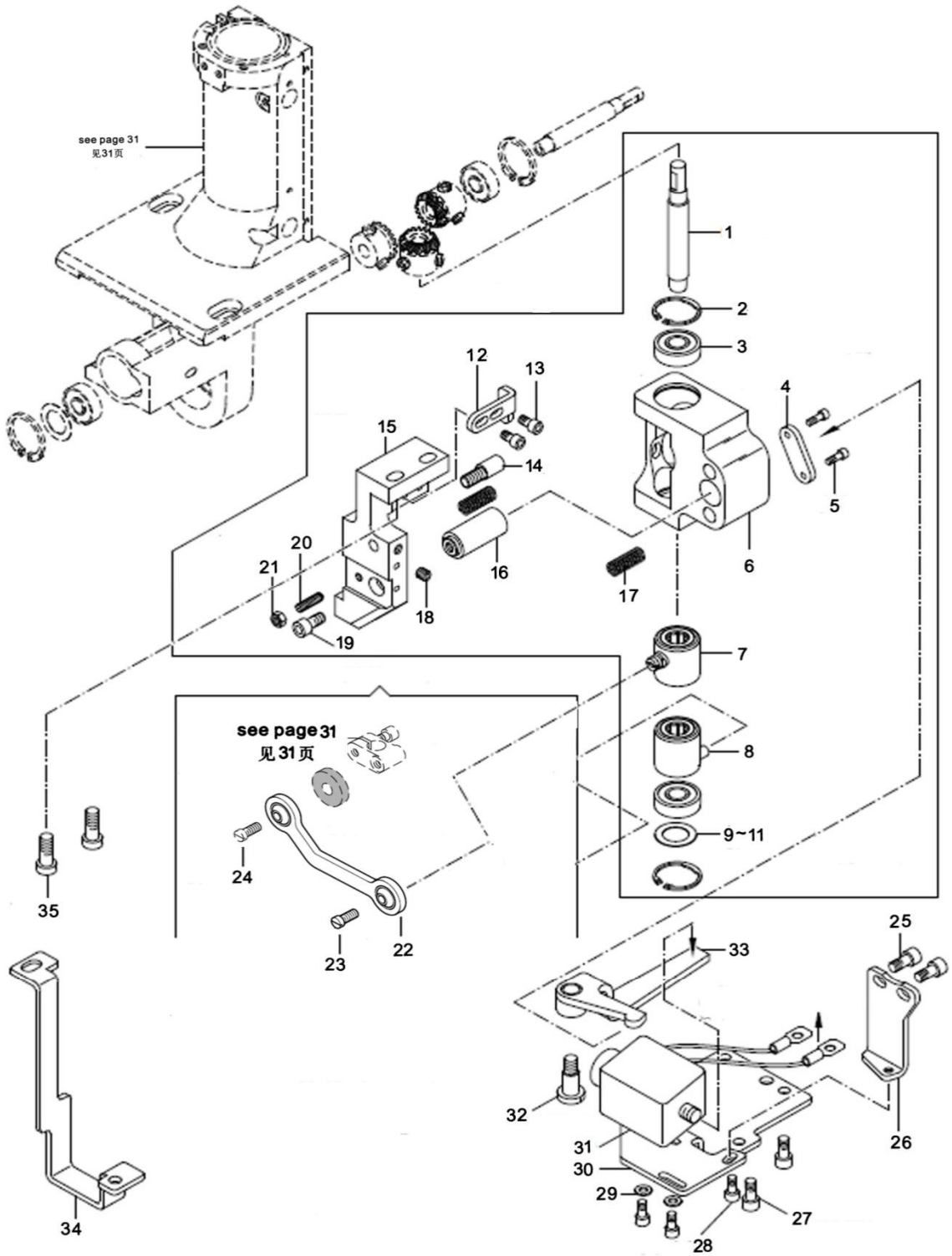

Per.No	Part No	Description	Qty
01	JINPFNB1626	Shaft	1
02	JINPFNA1908	Collar	2
03	JINPFNA1912	Bearing 608ZZ	1
04	JINPFNB2204	PLATE	1
05	JINPFNB2205	Screw M4x8	2
06	JINPFNB2206	Backstitch transmission	1
07	JINPFNB2207	Bearing seat	2
08	JINPFNB2208	One way bearing	2
09	JINPFNA1909	Washer	1
10	JINPFNA1910	Washer	1
11	JINPFNA1911	Washer	1
12	JINPFNB2212	Positioning piece	1
13	JINPFNB2213	Screw	2
14	JINPFNB2214	Eccentric pin	1
15	JINPFNB2215	Twist seat	1
16	JINPFNB2216	Connection pin	2
17	JINPFNB2217	spring	1
18	JINPFNA0304	Screw	1
19	JINPFNA0131	Screw	1
20	JINPFNA0808	Screw	1
21	JINPFNA0116	NUT	1
22	JINPFNB2222	Ball connecting rod assembly	1
23	JINPFNA1920	Screw	1
24	JINPFNA1920	Screw	1
25	JINPFNA0131	Screw	2
26	JINPFNB2226	Backstitch side plate	1
27	JINPFNA0131	Screw	2
28	JINPFNA0325	Screw	4
29	JINPFNA0127	Washer	2
30	JINPFNB2230	Electromagnet mount	1
31	JINPFNB2231	Reverse stitch electromagnet	1
32	JINPFNB2232	Screw	1
33	JINPFNB2233	Backstitch crank	1
34	JINPFNB2234	Bracket	1
35	JINPFNB2235	Screw	2

23. 剪线结构(-D)
Thread tirmmer (-D)

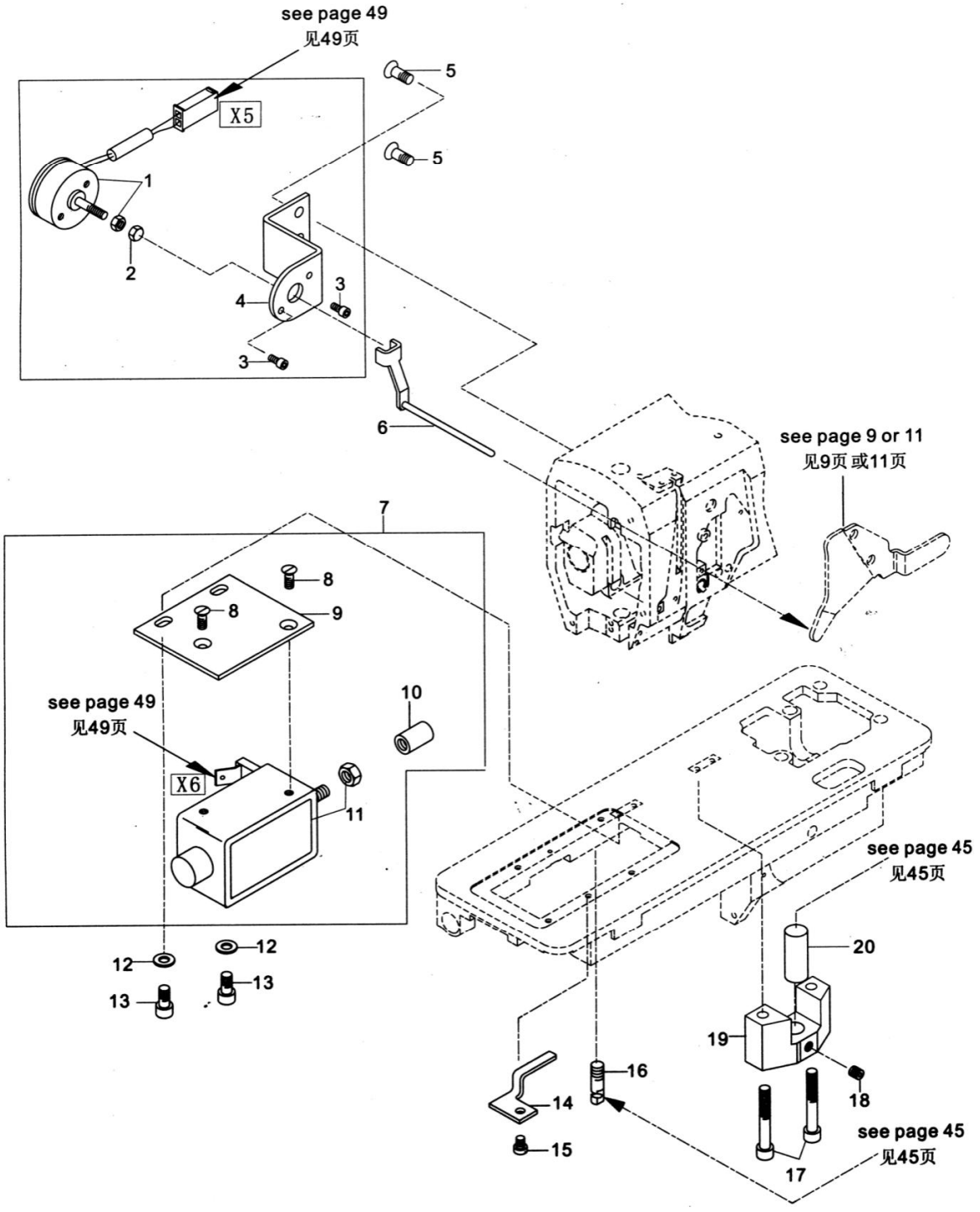

Per.No	Part No	Description	Qty
01	JINPFNA2301	Loose line electromagnet	1
02	JINPFNA2302	Nut M4	1
03	JINBF140130	Screw M3x5	2
04	JINPFNA2304	Mounting plate.	1
05	JINPFNA2305	Screw M5x10	2
06	JINPFNA2306	Tension release pin	1
07	JINPFNA2307	Shear line electromagnet assembly	1
08	JINPF1900A0643	Screw M4x6	2
09	JINPFNA2308	Mounting plate	1
10	JINPFNA2309	Connecting block	1
11	JINPFNA2310	Shear line electromagnet	1
12	JINPFNA0725	Washer Φ5	2
13	JINPFNA0131	Screw M5x10	2
14	JINPFNA2314	Oil line baffle	1
15	JINPFNA0325	Screw M4x5	1
16	JINPFNA0913	Screw M6x8	1
17	JINPFNA2108	Screw M5x30	2
18	JINPFNA0304	Screw M5x5 、	1
19	JINPFNA2319	Shear line swing rod seat	1
20	JINPFNA2320	Pin 10x32	1

24. 剪线结构(-D)
Thread tirmmer (-D)

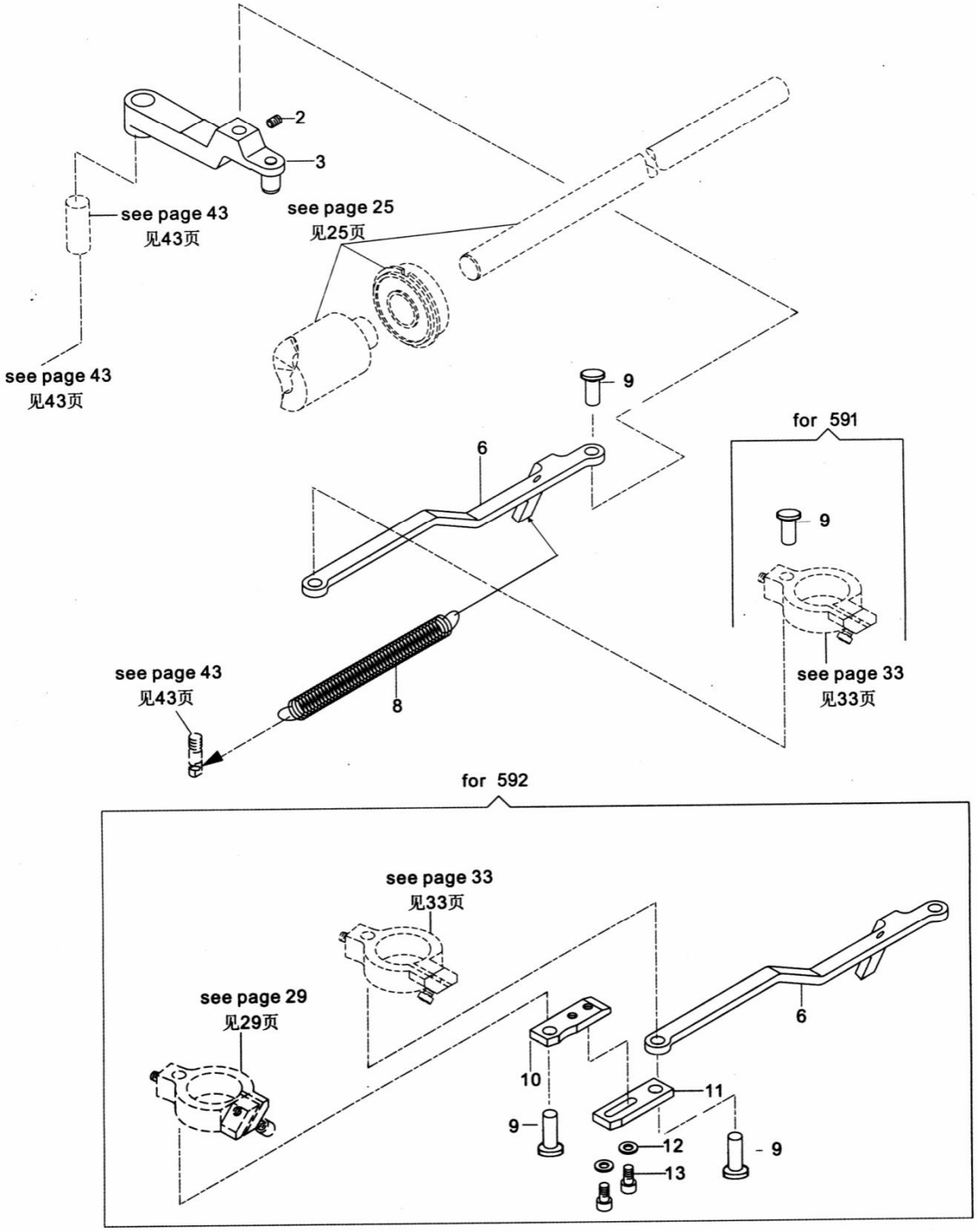

Per.No	Part No	Description	Qty
01	JINPFNA2409	Pin	1
02	JINPFNA0304	Screw M5x5	1
03	JINPFNA2403	Swing rod assembly	1
06	JINPFNA2406	Shear line swing rod	1
08	JINPFNA2408	Spring	1
09	JINPFNA2409	Pin	1
10	JINPFNA2410	Connecting plate II	1
11	JINPFNA2411	Connecting plate I	1
12	JINPFNA0127	Washer Φ4	2
13	JINPFNA0325	Screw M4x8	2

25 . 自动抬压脚
Atutomatic presser foot lifter

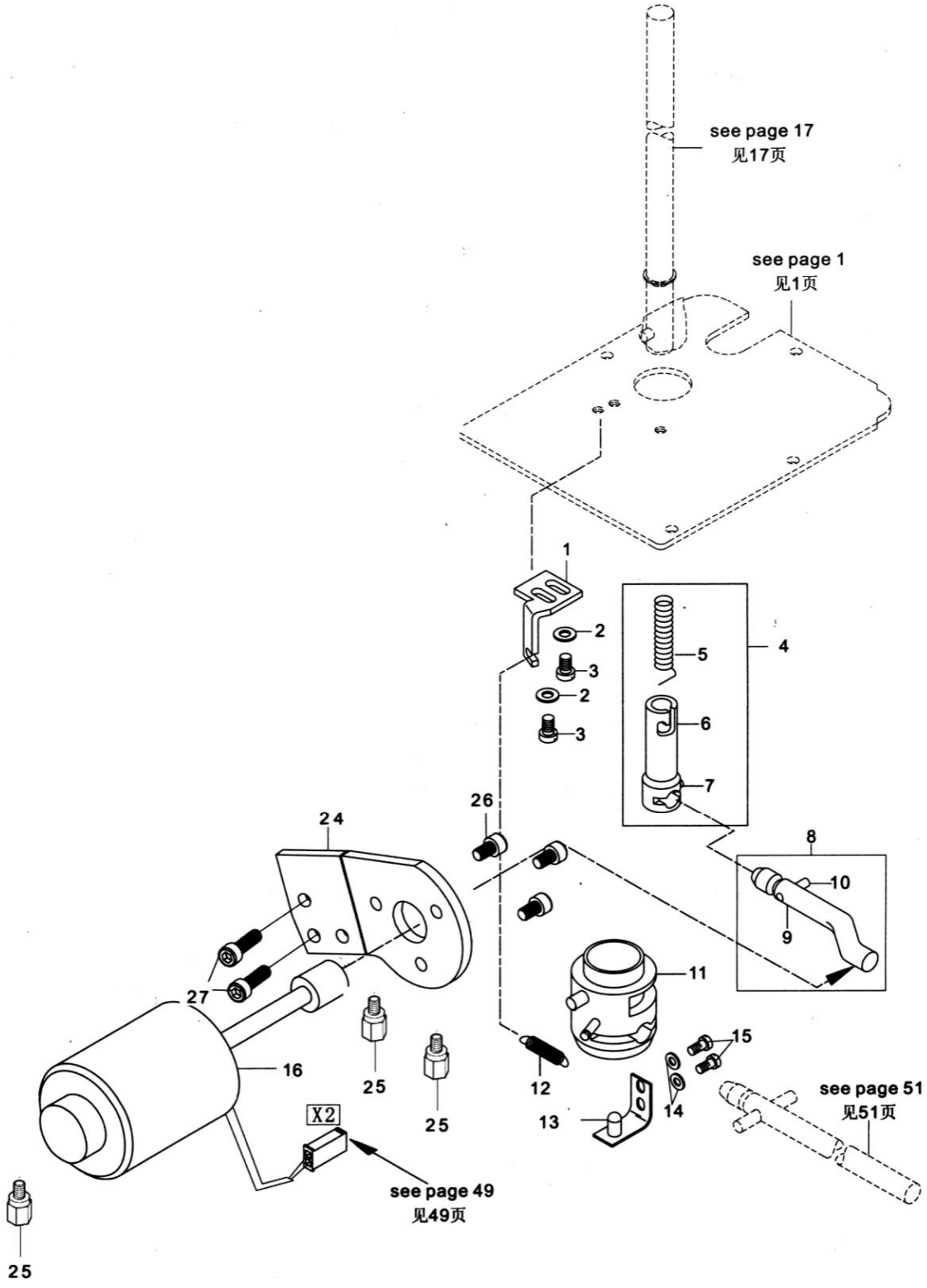

Per.No	Part No	Description	Qty
01	JINPFNA2501	Reset plate	1
02	JINPFNA0127	Washer Φ4	2
03	JINPFNA0131	Screw M5x10	2
04	JINPFNA2504	Manipulating the top column assembly	1
05	JINPFNA2505	Spring	1
06	JINPFNA2506	Manipulating of the top pillar	1
07	JINPFNA2507	Screw M4x6	1
08	JINPFNA2508	Control rod bending component	1
09	JINPFNA2509	Control rod bending	1
10	JINPFNA2510	Pin	1
11	JINPFNA2511	Presser foot lifting component of knee	1
12	JINPFNA2107	Spring	1
13	JINPFNA2513	Baffle assembly	1
14	JINPFNA0127	Washer Φ4	2
15	JINPFNA0325	Screw M4x6	2
16	JINPFNA2516	Presser foot lifting electromagnet	1
24	JINPFNA2524	One way bearing electromagnet mounting base	1
25	JINPFNA2525	Screw	2
26	JINPFNA0106	Screw M6x 10	3
27	JINPFNA0201	Screw M6x 30	2

26. 电控
Elecctric control

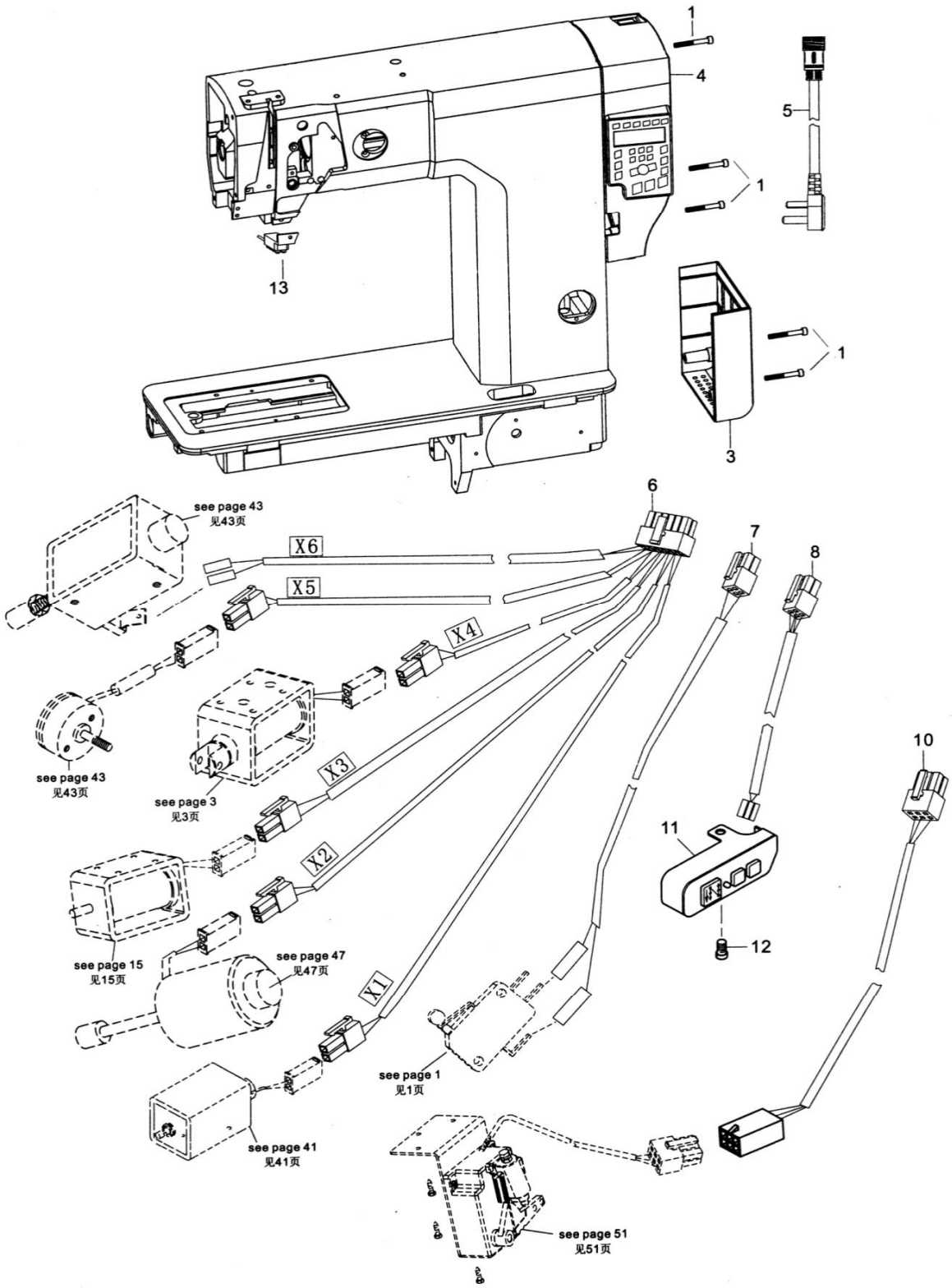

Per.No	Part No	Description	Qty
01	JINPFNA0718	Screw M5x20	1
02	JINPFNA0718	Screw M5x40	4
03	JINPFNA2603	Cover	1
04	JINPFNA2604	Electronic control	1
05	JINPFNA2605	The power adapter cable	1
06	JINPFNA2606	Main control line	1
07	JINPFNA2607	Swich line	1
08	JINPFNA2608	Reverse stitching switch wiring	1
09	JINPFNA2609	head lamp adapter	1
10	JINPFNA2610	Redal switch line	1
11	JINPFNA261301	Reverse stitching switch	1
12	JINPFNA0102	Screw M5x 10	1

27. 附件(1)
Accessories components (1)

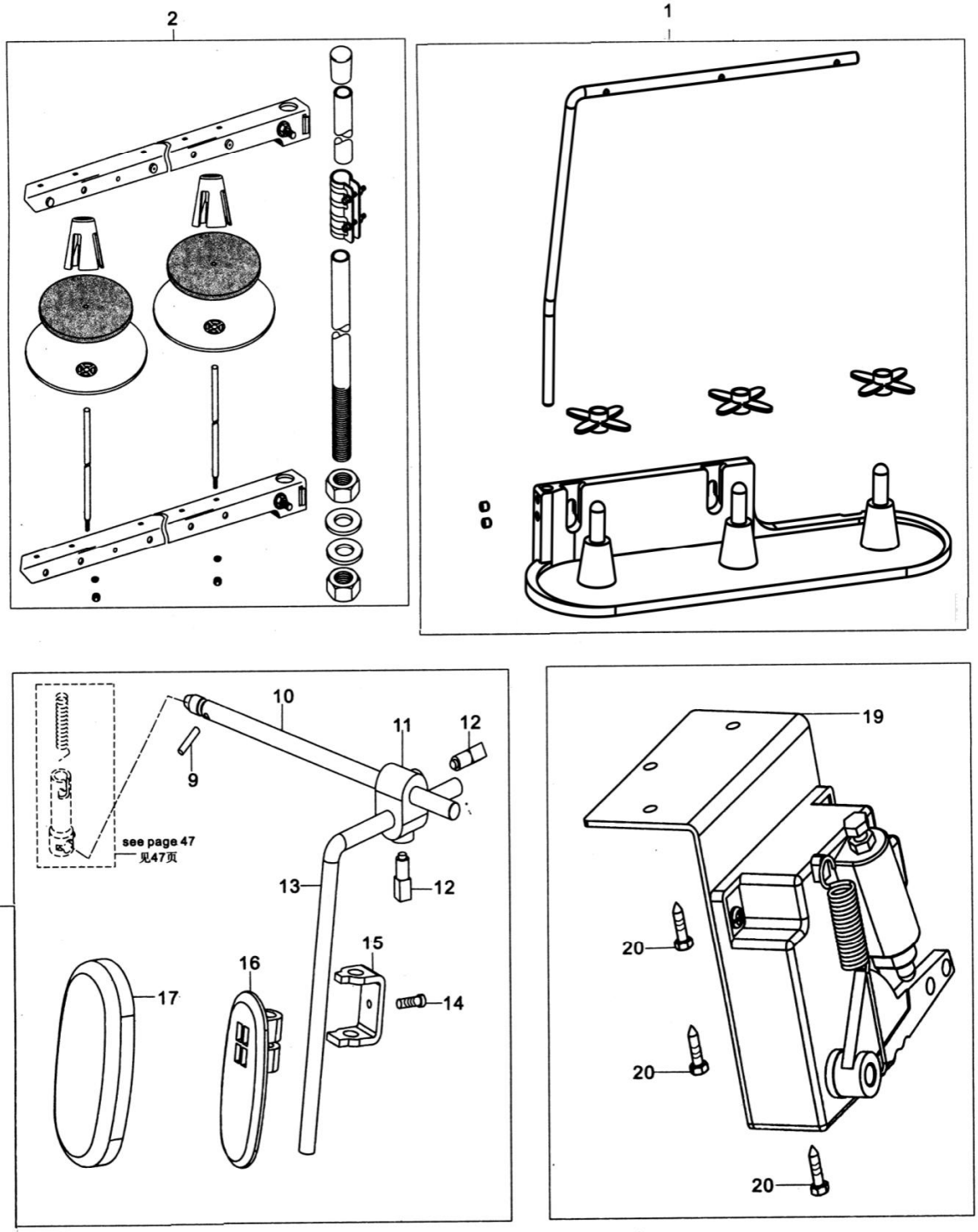

Per.No	Part No	Description	Qty
01	JINPFNA2701	Two wire frame component	1
02	JINPF55501127	Three wire frame component	1
09	JINPFNA2709	Pin 4x18	1
10	JINPFNA2710	Control rod	1
11	JINPFNA2711	Control rod joints	1
12	JINPFNA2712	Screw M8x14	2
13	JINPFNA2713	Control stick	1
14	JINPFNA2714	Screw M5x13.3	1
15	JINPFNA2715	Knee control adjusting bracket	1
16	JINPFNA2716	Knee control frame	1
17	JINPFNA2717	Knee control pad	1
18	JINPFNA2718	Knee control assembly	1
19	JINPFNA2604	Pedal	1
20	JINPFNA2720	Self tapping Screw	3
21	JINPFNA2721	Lever pad	1

28. 附件(2)
Accessories components (2)

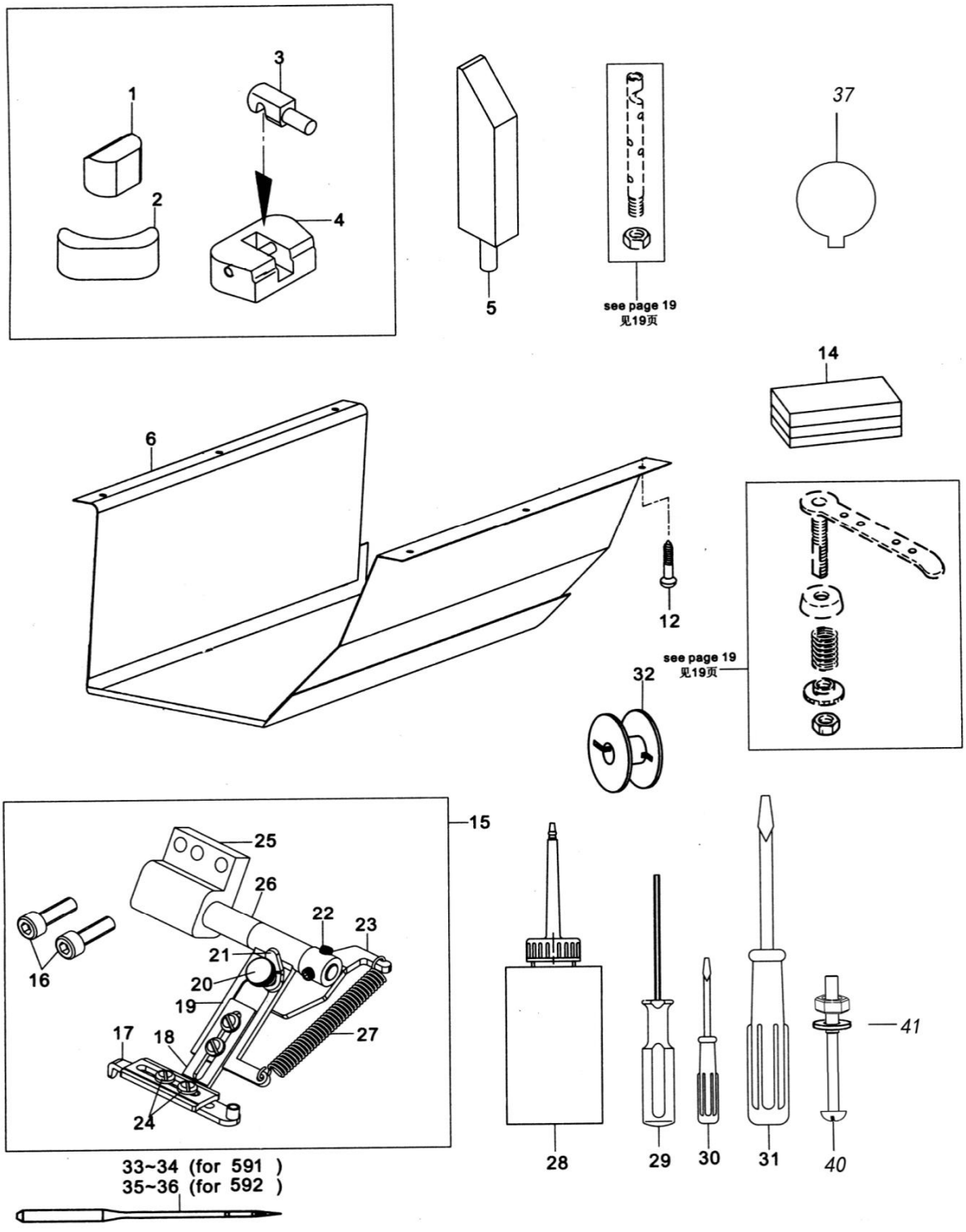

Per.No	Part No	Description	Qty
01	JINPFNA2801	Head support	2
02	JINPFNA2802	Head cushion	2
03	JINPFNA2803	Head hinge	2
04	JINPFNA2804	Head hinge base assembly	2
05	JINPFNA2805	Wood bracket assembly	1
06	JINPFNA2806	Head pan	1
12	JINPFNA2812	Wood screw ST4.2x20-C-H	6
14	JINPFNA2814	Head cover	1
15	JINPFNA2815	Pull device	1
16	JINPFNA2816	Screw M5x16	2
17	JINPFNA2817	Side plate assembly	1
18	JINPFNA2818	Adjusting plate	1
19	JINPFNA2819	Welding guide plate	1
20	JINPFNA2820	Screw M4x12	1
21	JINPFNA2821	Fastening wrench	1
22	JINPFNA2822	Screw M6x5	1
23	JINPFNA2823	Welding adjustment	1
24	JINPFNA2824	Screw M4x5	4
25	JINPFNA2825	Mounting seat	1
26	JINPFNA2826	Shaft	1
27	JINPFNA2827	Drag spring	1
28	JINPFNA2828	Oil pot	1
29	JINPFNA2829	Inner six angle wrench	1
30	JINPFNA2830	Small screwdriver	1
31	JINPFNA2831	Medium screwdriver	1
32	JINPFNA1762	Bobbin	3
33	JINPFDTDP516	Neddie 134PCL 100/16 (for591)	4
34	JINPFDTDP521	Neddie 134PCL 130/21 (for591)	4
35	JINPFDTDP516	Neddie 134PCL 100/16 (for592)	4
36	JINPFDTDP521	Neddie 134PCL 130/21 (for592)	4
37	JINPFNA2837	Oil pot label	1
40	JINPFNA2840	Fork screw M6	2
41	JINPF8420M-D31523	Gasket M6	4

29.步进款专用件

Stepper motor parts

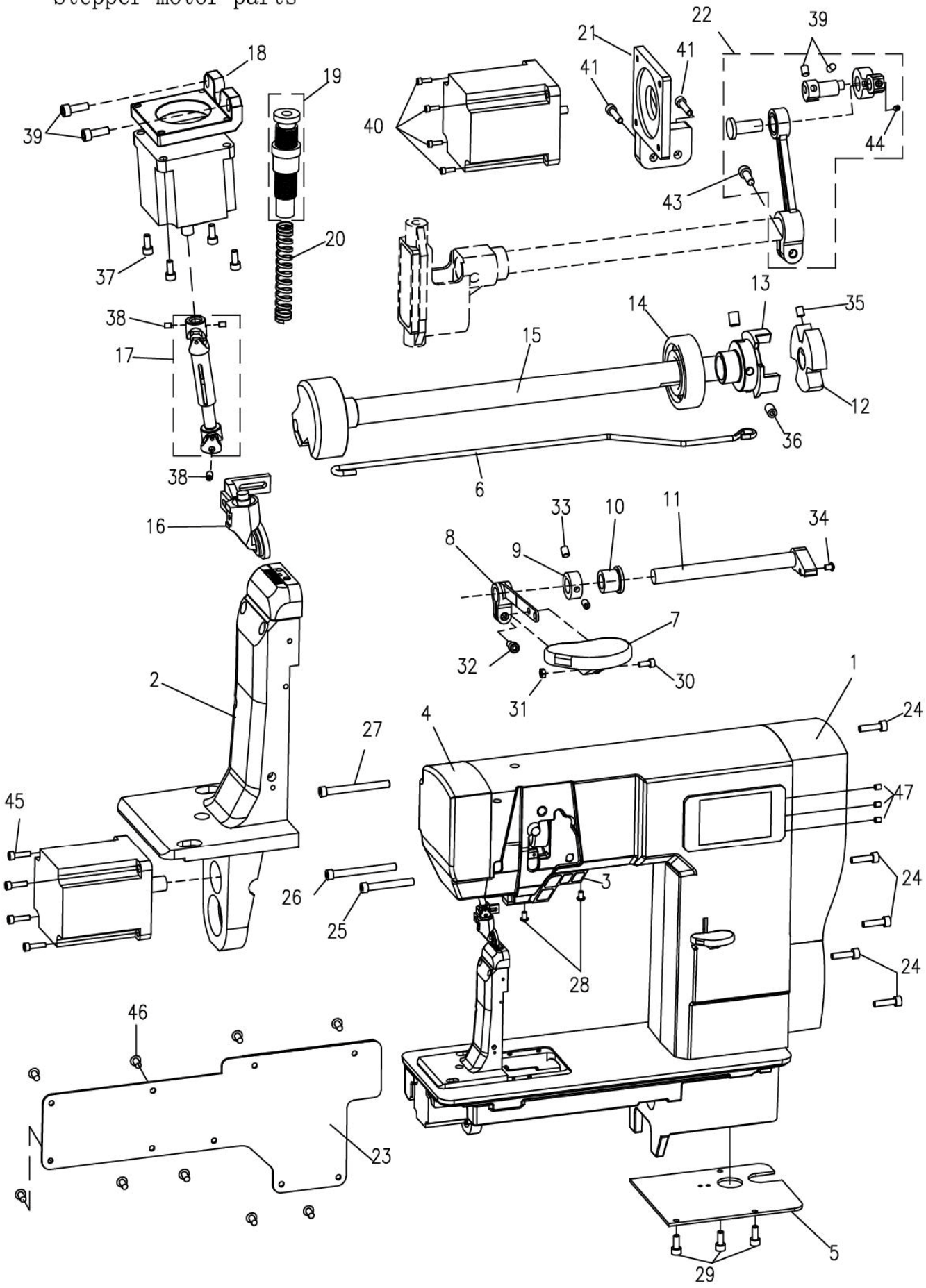

Per.No	Part No	Description	Qty
01	JINPFNC0126	Electronic control	1
02	JINPFNC0102	Feed support	1
03	JINPFNC010301	Dichromatic light	1
04	JINPFNC010401	Panel	1
05	JINPFNC0105	Bottom plate	1
06	JINPFNC0106	Connecting rod	1
07	JINPFNC0107	Spanner of reversal stitch	1
08	JINPFNC0108	handle bushing	1
09	JINPFNC0109	Link	1
10	JINPFNC0110	bushing	1
11	JINPFNC0111	Actuating switch shaft	1
12	JINPFNC0112	Coupling rubber	1
13	JINPFNC0113	Bearing sleeve	1
14	JINPFNC0114	Bearing60/22-Z	1
15	JINPFNC0115	Counter weight assy	1
16	JINPFNC0116	Idler wheel foot asm	1
17	JINPFNC0117	Universal Joint Assembly	1
18	JINPFNC0118	Motor mounting plate1	1
19	JINPFNC0119	PRESSER ADJUSTING SCREW	1
20	JINPFNC0120	PRESSER BAR SPRING	1
21	JINPFNC0121	Motor mounting plate2	1
22	JINPFNC0122	Connecting Rod Assembly	1
23	JINPFNC0123	Back cover board	1
24	JINPFNA0718	Screw M5x20	5
25	JINPFNA0112	Screw M5x35	1
26	JINPFNA0111	Screw M5x60	1
27	JINPFNA0111	Screw M5x60	1
28	JINPFNA0120	Screw M4x6	2
29	JINPFNA0131	Screw M5x10	3
30	JINPFNA0325	Screw M4x10	1
31	JINPFNA0116	NutM4	1
32	JINPFNA0131	Screw M5x10	1
33	JINPFNA1810	Screw M4x6	2
34	JINPFNA0120	Screw M4x6	1
35	JINPFNA0713	Screw M6x8	2
36	JINPFNA0713	Screw M6x8	2
37	JINPFNA0724	Screw M5x12	4
38	JINPFNA1810	Screw M4x6	4
39	JINPFNA0801	Screw M6x16	2
40	JINPF1790S0326	Screw M4x12	4
41	JINPFNA0718	Screw M5x20	2
43	JINPFNA0801	Screw M6x16	1
44	JINPFNA1810	Screw M4x6	1
45	JINPFNA0718	Screw M5x20	4
46	JINPFNA0102	Screw M5x10	9
47	JINPFNA1810	Screw M4x6	3

NA-35DUT Operation Instructions for Stepping Rolla

I.Security considerations

1. safety precautions:

Please read this technical information and the matching sewing machine instructions before use, with the correct use.

1.1(1) Power supply voltage and operating frequency: please follow the specifications of the nameplate of motor and control box.

(2) Electromagnetic wave interference: Please keep away from high frequency magnetic wave machine or radio wave transmitter, etc., so as not to cause the electromagnetic wave to interfere with the wrong action of this drive device.

(3) Grounding: In order to prevent noise interference or leakage accidents, please do a good grounding project (including sewing machines, motors, control boxes, positioners).

1.2 Do not pull in when removing the motor or control box; there is dangerous high voltage in the control box, so wait more than 1 minute before opening the control box cover.

1.3 To ensure personal safety, please turn off the power supply during maintenance of machinery or needle piercing.

1.4 ⚠ This symbol indicates that when the machine is installed, any error may damage the human body or the machine. So there will be this sign where the machine is dangerous.

This symbol indicates that there is high voltage and so on, electrical danger will have this sign.

II. Instructions for the operation of the box

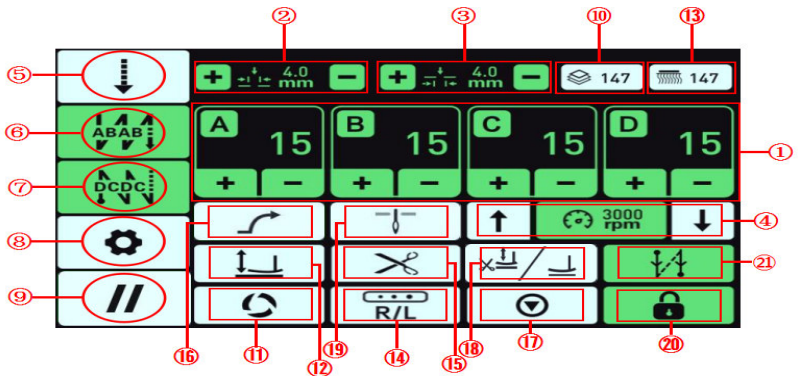

Serial number	Function	Pres s button	Description
1	Number of stitches shown		1. Adjust and display the number of trips back and forth between the free / W joints; 2. Under the pattern seam for the various pattern number editor;
2	Synchronization key	4.0 mm	Adjust the needle distance of upper roller;
3	Lower Synchronous Distance Adjustment Key	4.0 mm	Lower roller needle distance adjustment;
4	Speed keys	3000 rpm	Each sewing interface under the addition and reduction of the key to play the role of speed regulation;
5	Sewing mode switch key		Contact switchable W seam / pattern seam / free seam;
6	Front Seam Bond		Front fixed joint / front double fixed joint / front four fixed joints / closing cycle;
7	Post-sewn bond		Rear fixed joint / rear double fixed joint / rear four fixed joints / closed cycle;
8	Parameter keys		One key into the internal parameter settings;
9	One key recovery key		Under the standby interface, the touch is used to restore the factory setting;
10	Surface line count display		Surface line count display;
11	Trigger key		Continuous fixed seam mode, this key corresponding to the light, indicating that the continuous fixed seam mode default to trigger mode;
12	Key to Lift Foot Function		Automatic lifting foot function on and off;
13	Bottom line count		Bottom line count shows;
14	Compensation left and right	R/L	Shortcut keys for left and right corner compensation;
15	Scissors Function Key		Scissors function on/off;
16	Soft Start Function Key		Soft start function on / off;
17	Pattern Cycle Startup Key		In pattern seam mode, automatic operation can be opened;
18	Lift the foot after the middle pause		The function of lifting and pressing the foot after cutting the wire in the middle is on / off;
19	Upper and lower needle selection		The function switch between the upper stop needle position and the lower stop needle position;
20	Lock screen function keys		Lock screen function on / off;
21	Close stitch function keys		Front stitch / rear stitch / front stitch / close;

III. system monitoring status

Operation panel default mode, press parameter settings key to enter the list of internal parameters, and then click on the system debugging-system information into the monitoring interface.

Project name	Unit		Project name	Unit
Motor speed	rpm		Motor Current	0.01 A
Bus voltage	V		Pedal voltage	0.01 V
Mechanical Angle of Head	Degree		Initial motorangle	Degree
Master version number	/		HMI versionnumber	/
Main control model	/		HMI model	/

IV、System Parameter Table:

No	Project	Content	Scope	Default	Level
Sewing					
1	Front reinforcement speed	Pre-reinforcement Joint Speed	200~1800 rpm	1200	I
2	Post-reinforcement Speed	Post-reinforcement Joint Speed	200~1800 rpm	1200	I
3	Prior reinforcement compensation	Compensatory parameters of front stitch stitch	0~100	0	I
4	Post-reinforcement Compensation	Compensatory parameters of post-fix stitch	0~100	0	I
5	Continuous reinforcement speed	Continuous reinforcement joint speed	200~1800 rpm	1500	I
6	Continuous reinforcement compensation1	Compensatory parameters of continuous stitch	0~100	0	I
7	Continuous reinforcement compensation2	Compensatory parameters of continuous stitch	0~100	0	I
8	Reinforcement Speed Mode	0: Auto Fix Speed 1: Pedal Speed	0/1	0	I
9	Number of needle locks	Number of needle locks	0~10	1	I
10	Direction of locking needle	Direction of locking needle	0/1	0	I
11	Wheel gauge for locking needle	Wheel gauge for locking needle	0~50	0.8	I
12	Wheel needle distance	Wheel needle distance	0~50	0.8	I
Pressing Foot Parameters					
1	Press the foot so that	Lift foot enable set 0: invalid 1: valid	0/1	0	I
2	Hold your foot down so you can	0: invalid 1: valid	0/1	1	I
3	Start-up delay after drop	Delay to confirm that the pin has been lowered	~800 ms	100	I
4	Maintain duty cycle	Duty cycle of lift pin output	0~60	30	I
5	Lift hold time	Force off when lifting foot holds	1~12(s)	12	I
6	Slow Down Time	Slow down output time of lifting foot	0~500 ms	150	I
7	Full pressure time of lifting foot	Total pressure output time of lifting foot	~800 ms	150	I
8	Press the foot to lift the duty cycle	Press the foot to lift the duty cycle	50~95	90	I
9	Soft drop duty ratio	Soft drop duty ratio	1~30	10	I
Parameters of shear line					
1	Loose electromagnet duty cycle	Loose electromagnet duty cycle	10~100	60	I
2	duty cycle of shear electromagnet	duty cycle of shear electromagnet	10~100	80	I
3	Cutting Speed	Cutting speed	rpm 100~500	250	I
4	Starting adjustment of shear line	Cutting line suction angle setting	10~200	45	I
5	Cut-off adjustment	Setting of release angle of shear line	300~360	346	I
6	Starting adjustment of loose line	Starting Angle of Loose Line	0~360	300	I
7	Loose end adjustment	Loose ends angle	0~360	350	I
Parameters of sewing section					
1	Soft start enable	0: invalid 1: valid	0/1	1	I
2	Number of soft start pins	1~99: number of soft-start pins	0~9	3	I
3	First speed	Soft Start 1 Pin Speed	200~800 rpm	600	I
4	Second speed	Soft Start Needle 2 Speed	900~1200 rpm	1000	I
5	Three - pin	Soft Start ~3-9 Pin Speed	1300~1800 rpm	1500	I
6	Automatic running	0: invalid 1: valid	0/1	0	I
7	Maximum stitch length	Maximum stitch length setting	0.0~7.0	5.0	I
8	Follow the needle pitch of the upper and lower rollers	Follow the needle pitch of the upper and lower rollers	0~10	0	I
Piecework parameters					
1	Bottom line rate setting	0: invalid 5/10/15/2 0: bottom line rate	0~50	10	I
2	Bottom line count	Bottom line initial setting	0~1000	100	I
3	Piecework rate setting	0: no piece function 1 5 pieces + multiple 1	0~50	10	I
4	Number of pieces	Number of pieces initial setting	0~1000	100	I
5	Machine Lubricating Switch	0: invalid 1: valid	0/1	0	I
6	Lubrication count	0: No Lubricating Counting Function 1~2 0: Lubricating Parts by Multiple +1	0~9999	0	I
Panel parameters					
1	Selection of key function	0: suture flip 1: patch 2:Reverse stitch	0/1/2	1	I
2	Model selection	Model selection	1~99	2	I
3	Tilt switch	Head Safety Switch Signal Mode Setting 0: often open 1: often close 2: prohibited protection	0/1/2	2	I
4	Automatic screen lock	After turning it on, the screen cannot operate on the interface after the set time;	0/1	1	I
5	Lock screen time	Lock screen time setting	0~240	10	I
Pedal parameters					
1	Pedal speed curve	0: Normal 1: Acceleration Slow 2: Acceleration Fast	0/1/2	0	I
2	Pedal neutral position	Pedal neutral trim	0~200	100	I
3	Running high-speed travel	Run to the highest speed pedal position relative to the pedal neutral stroke	0~300	210	I
4	Foot lifting command time	Step behind the pedal and confirm the time when the command is valid	10~300 ms	80	I
5	Start-up trip	The starting position of the pedal relative to the stroke when the pedal is neutral	0~200	125	I
6	Start the acceleration	The position of the pedal starting to accelerate, relative to the stroke of the pedal when it is neutral	0~300	150	I
7	The rising stroke of the foot	The position of the pedal in which the foot is lifted, relative to the stroke when the pedal is neutral	0~200	70	I
8	Trip under foot pressure	The position of the pedal in which the foot is lowered, relative to the stroke of the pedal when it is neutral	0~200	110	I
9	Cut-line action strokel	When there is no lifting function, the pedal position of the starting shear line is relative to the stroke when the pedal is neutral	0~150	70	I
10	Cut-line action stroke 2	When the foot is lifted, the pedal position of the starting shear line is relative to the stroke when the pedal is neutral	0~150	40	I
Spindle Parameters					
1	Maximum speed	Maximum sewing speed	2000~3500 rpm	2500	I
2	Minimum speed	Minimum sewing speed	150~300 rpm	200	I
3	Upper dead angle	Upper dead angle	250~360	290	I
4	Lower pin position	Position adjustment of lower stop needle	0~200	60	I
5	Stop angle	Stop angle	180~360	360	I
6	Noise Reduction Function	0 150 Noise Reduction Regulation	0~150	8	I
7	Motor weighting	0: invalid 1: valid	0/1	0	I
8	Motor weighting	1 15 Strength regulation	0~15	2	I
9	Reverse lift enable	0: invalid 1: valid	0/1	0	I
10	Reverse lift angle	Reverse needle angle	0~45°	20	I
11	Fine tuning of the pin	Fine tuning of the pin	0~200	100	I
12	Maximum pedal speed	Set the maximum pedal speed	200~2500 rpm	2500	I
13	Pin mode settings	Pin mode settings	0/1/2/3	0	I
14	Needle angle	Needle angle	0~200	180	I
15	Upper angle	Upper angle	0~360	300	I
16	Layout angle settings	Layout angle settings	0~180	40	I
17	Layout angle setting	Layout angle setting	150~300	195	I
18	Pin position enables	0: invalid 1: valid	0/1	1	I
Upper and lower roller compensation					
1	Upper roller compensation	Upper roller compensation	0~40	0	I
2	Lower roller compensation	Lower roller compensation	0~40	0	I
3	Positive compensation for the first needle of the upper roller	Positive compensation for the first needle of the upper roller	0~100	0	I
4	Positive compensation for the first needle of the lower roller	Positive compensation for the first needle of the lower roller	0~100	0	I
5	Negative compensation for the first needle of the upper roller	Negative compensation for the first needle of the upper roller	0~100	0	I
6	Negative compensation for the first needle of the lower roller	Negative compensation for the first needle of the lower roller	0~100	0	I
7	High-speed current of the upper roller	High-speed current of the upper roller	1~5	5	I
8	High-speed current of lower roller	High-speed current of lower roller	1~5	5	I
9	Upper roller low speed current	Upper roller low speed current	1~5	3	I
10	Lower roller low speed current	Lower roller low speed current	1~5	3	I
System debugging-system aging					
1	Mode selection	Automatic test mode setting 0: Standard time mode 1: Stitch number mode (P98 sets the number of stitches) 2: Simple time mode 3: Factory aging mode (do not use this mode on the machine head)	0~3	1	I
2	Running speed	Automatically test the maximum speed setting	200~3000rpm	2200	I
3	operation hours	Automatic test run time	0~360	30	I
4	Pause time	Automatic test pause time setting	0~360	20	I
5	Run switch	0: invalid 1: valid	0~2	2	I
Left and right boundary compensation					
1	Left and right boundary compensation switch	Left and right boundary compensation switch	0~2	0	I
2	Left compensation upper scroll wheel value	Left compensation upper scroll wheel value	0.0~10.0	0.0	I
3	Left compensation lower scroll wheel value	Left compensation lower scroll wheel value	0.0~10.0	0.0	I
4	Number of left compensation stitches	Number of left compensation stitches	0~9	0	I
5	Right compensation upper scroll wheel value	Right compensation upper scroll wheel value	0.0~10.0	0.0	I
6	Right compensation lower scroll wheel value	Right compensation lower scroll wheel value	0.0~10.0	0.0	I
7	Number of right compensation stitches	Number of right compensation stitches	0~9	0	I

V、Error codes

Code	Fault display	Fault content	Possible causes of failure	Inspection items, processing
1/2	E011 E012	Motor signal malfunction	Motor position sensor signal malfunction	Electrical plugs are in good contact Electrical Signal Detector Damage to Sewing Machine Handwheel Installed
6/8	E021 E023	Motor overload	Motor plug motor overload	Whether the motor plug is in good contact with the nose or the shearing mechanism is stuck Sewing fabric over gauge thickness Current detection signal is normal
9	E101	Hardware-driven failures	Direct- through drive device for current detection	Whether the system current detection circuit is working properly
10/11	E111 E112	Over-voltage system	Failure of brake circuit with over-voltage Error in voltage detection	If the incoming voltage of the system is too high, the brake resistance will work properly The system voltage detection loop works properly
12/13	E121 E122	Low voltage system	Error in detection of actual low voltage	Low incoming voltage The system voltage detection loop works properly
14	E131	Fault of Current Detection Circuit	Abnormal current detection	System current detection circuit is working properly
15	E133	OZ circuit fault	Abnormal OZ circuit	Does the system OZ loop work properly
16	E134	DBFLT fault	Automatic Resistance Circuit Unnormal	Automatic Resistance Plug in Good Contact with Automatic Resistance Damage
18	E201	Excessive motor current	Abnormal current detection Abnormal operation of motor	System current detection circuit is working properly Motor signals are normal
19/20	E211 E212	Abnormal operation of motor	Abnormal operation of motor	Motor plugs are in good contact with motor signals
24	E402	Foot pedal ID malfunction	Pedal Identification Fault	Loose pedal joint
25	E403	Pedal Zero Correction Fault	Pedal zero correction beyond range	The pedal is not stopped when the pedal is damaged or corrected
26	E501	Troubleshooting switch	Turnover Switch	Drop the nose or check the flip switch
27	P.oFF	Power-down display	Power off	Waiting for power to re-open
28	EvAL	Trial protection failures	Trial time	Contact Agent
31	E601	Hardware-driven failures	Hardware overcurrent STEP2 pendulum motor	Whether the system current detection circuit is working properly
32	E602	Hardware-driven failures	Current STEP2 Software of Swing Needle Motor	System current detection circuit is working properly Damage to drivers
33	E603	Hardware-driven failures	STEP2 Current Detection Circuit of Swing Needle Motor	Whether the system current detection circuit is working properly
34	E604	Motor signal malfunction	Initial mechanical angle STEP2 swing needle motor	Electrical plugs are in good contact
35	E605	Motor signal malfunction	An initial encoder or rotor STEP2 a pendulum motor is stuck	Is the motor plug in good contact with the machine
36	E606	Hardware-driven failures	Electric winding circuit STEP2 swing motor	System current detection circuit is working properly Damage to drivers
40	/	Failure of the upper roller stepper motor	Hardware overcurrent of upper roller stepper motor	The upper roller stepper motor plug is in good contact Damage to drivers
41	/	Down Roller Stepping Motor Failure	Down Roller Stepping Motor Hardware Overcurrent	Whether the lower wheel stepping motor plug is in good contact with the drive device damage
/	L.bob	Bottom line tips	The bottom line count is negative	After changing the bottom line, press the S button to cancel the prompt
/	P.bob	Piecework Tips	The count value is zero	Press the S key to enter the interface, long press the "front fixed seam" key more than 2 seconds to cancel the state of prompt
43	E613	Fan failure	Fan stalled	Whether the fan plug is in good contact Whether the fan blades are contacted by foreign objects and cannot rotate

Note : 1, abnormal sewing action (abnormal steering, electromagnet action, etc.): enter the monitoring interface to see if the model is correct
2, flip the fault E501: determine whether the switch detection is normal, temporary use can change Turnover safety switch parameters.
3. if the above failure can not be eliminated according to the inspection items, please seek technical support.

NA-35DUT 步进罗拉车操作说明书 V1.1

一.安全上的注意事项：

1、安全上的注意事项：

使用前请详细阅读本技术资料与所搭配的缝制机械说明书，配合正确使用。

1.1（1）电源电压与工作频率：请遵照马达与控制箱铭牌所标之规格。

（2）电磁波干扰：请远离高频磁波机器或电波发射器等，以免所产生的电磁波干扰本驱动装置因而发生错误动作。

（3）接地：为防止杂讯干扰或漏电事故，请做好接地工程（包括缝纫机、马达、控制箱、定位器）。

1.2 拆卸马达或控制箱时勿带电拔插；控制箱里面有危险高压电，所以关闭电源后要等 1 分钟以上方可打开控制箱盖。

1.3 为保证人身安全，请在维修机械或进行穿针作业时关闭电源。

⚠ 这个标示符号表示机器安装时，如有错误恐会伤害到人体或机器会受到损坏。所 以机器方面有危险性的地方会有此标志。

⚠ 这个标志符号表示有高压电等，电气方面有危险性的地方会有此标志。

二、操作盒使用说明：

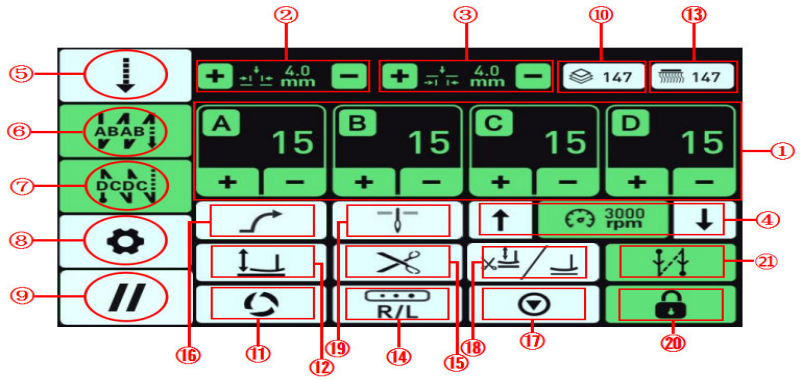

序号	功能	按键	描述
1	缝纫针数显示		1. 调整及显示自由缝/W 缝界面固缝来回趟数； 2. 花样缝下为各种花样段号的编辑；
2	上同步距调节键		上滚轮针距调节；
3	下同步距调节键		下滚轮针距调节；
4	速度键		各缝制界面下上下键起调速作用；
5	缝制模式切换键		点触一下可切换W 缝/定针缝/花样缝/自由缝；
6	前固缝键		前固缝/前双固缝/前四固缝/关闭 循环；
7	后固缝键		后固缝/后双固缝/后四固缝/关闭 循环；
8	参数键		一键进入内部参数设置；
9	一键恢复键		待机界面下，点触进行恢复出厂设置；
10	面线计数显示		面线计数显示；
11	触发键		连续固缝模式，此键对应的灯常亮，表明连续固缝模式默认为触发模式；
12	抬压脚功能键		自动抬压脚功能开与关；
13	底线计数显示		底线计数显示；
14	左右补偿键	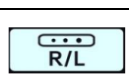	左右拐角补偿快捷键；
15	剪刀功能键		剪刀功能开/关；
16	软启动功能键		软启动功能开/关；
17	花样循环启动键		花样缝模式下，可开启自动运行；
18	中间停顿/剪线后抬压脚		中间停顿/剪线后抬压脚功能开/关；
19	上下针位选择		上停针位与下停针位功能切换；
20	锁屏功能键		锁屏功能开/关；
21	密针缝功能键		前密针缝/后密针缝/前后密针缝/关闭；

3、系统监控状态：

操作面板默认模式下，按参数设置键进入内部参数列表，再点击系统调试-系统信息进入监控界面。

项目名称	单位		项目名称	单位
电机转速	rpm		电机电流	0.01A
母线电压	V		踏板电压	0.01V
机头机械角度	度		电机初始角度	度
主控版本号	/		HMI 版本号	/
主控型号	/		HMI型号	/

四.系统参数表：

No	项目	内容	设定范围	默认值	级别
正倒缝缝制					
1	前加固速度	前加固缝速度	200～1800rpm	1200	I
2	后加固速度	后加固缝速度	200～1800rpm	1200	I
3	前加固补偿	前固缝针迹补偿参数	0～100	0	I
4	后加固补偿	后固缝针迹补偿参数	0～100	0	I
5	连续加固速度	连续加固缝速度	200～1800rpm	1500	I
6	连续加固补偿 1	连续固缝针迹补偿参数	0～100	0	I
7	连续加固补偿 2	连续固缝针迹补偿参数	0～100	0	I
8	加固速度模式	0：自动固缝速度 1：踏板速度	0/1	0	I
9	锁针针数	锁针针数	0～10	1	I
10	锁针方向	锁针方向	0/1	0	I
11	锁针上滚轮针距	锁针上滚轮针距	0～50	0.8	I
12	锁针下滚轮针距	锁针下滚轮针距	0～50	0.8	I
压脚参数					
1	压脚使能	抬压脚使能设定 0：无效 1：有效	0/1	0	I
2	压脚缓降使能	0：无效 1：有效	0/1	1	I
3	降后启动延时	为确认压脚已放下的延时	0～800ms	100	I
4	保持占空比	抬压脚输出占空比	0～60	30	I
5	抬起保持时间	抬压脚保持时间后强制关断	1～12(s)	12	I
6	缓降时间	抬压脚缓降输出时间	0～500ms	150	I
7	抬压脚全压时间	抬压脚全压输出时间	0～800ms	150	I
8	压脚抬起占空比	压脚抬起占空比	50～95	90	I
9	压脚软下降占空比	压脚软下降占空比	1～30	1	I
剪线参数					
1	松线电磁铁占空比	松线电磁铁占空比	10～100	60	I
2	剪线电磁铁占空比	剪线电磁铁占空比	10～100	80	I
3	剪线速度	剪线速度	100～500rpm	250	I
4	剪线起始调整	剪线吸合角度设定	10～200	45	I
5	剪线结束调整	剪线释放角度设定	300～360	346	I
6	松线起始调整	松线起始角度	0～360	300	I
7	松线结束调整	松线结束角度	0～360	350	I
缝制段参数					
1	软启动使能	0：无效 1：有效	0/1	1	I
2	软启动针数	1~99：软起动针数	0～9	3	I
3	第一针速度	软启动第 1 针速度	200～800rpm	600	I
4	第二针速度	软启动第 2 针速度	900～1200rpm	1000	I
5	三针后速度	软启动第 3～9 针速度	1300～1800rpm	1500	I
6	自动跑合	0：无效 1：有效	0/1	0	I
7	针距上限	最大针距设定	0.0~7.0	5.0	I
8	上下滚轮针距随动	上下滚轮针距随动	0～10	0	I
计件参数					
1	底线倍率设定	0：无效 5/10/15/20：底线倍率	0～50	10	I
2	底线计数	底线初值设定	0～1000	100	I
3	计件倍率设定	0:无计件功能 1～50:计件按倍数+1	0～50	10	I
4	计件计数	计件数初值设定	0～1000	100	I
5	机器润滑开关	0：无效 1：有效	0/1	0	I
6	润滑计数	0:无润滑计数功能 1～20:润滑计件按倍数+1	0～9999	0	I
面板参数					
1	机头按键功能选择	0：固缝翻转 1：补针	0/1/2	0	I
2	机型选择	机型选择	1～99	2	I
3	倾斜开关	机头安全开关信号模式设定 0：常开 1：常闭 2：禁止保护	0/1/2	0	I
4	自动锁屏	开启后，屏幕在设定时间后无法对界面进行操作	0/1	1	I
5	锁屏时间	锁屏时间设定	0～240	10	I
脚踏板参数					
1	踏板速度曲线	0：正常 1：加速慢 2：加速快	0/1/2	0	I
2	踏板中立位置	踏板中立位置微调	0～200	100	I
3	运行高速的行程	运行到最高速的踏板位置，相对于踏板中立时的行程	0～300	210	I
4	抬压脚命令时间	踏板后踩，抬压脚命令有效时确认时间	10～300ms	80	I
5	开始运行的行程	开始运行的踏板位置，相对于踏板中立时的行程	0～200	125	I
6	开始加速的行程	开始加速运行的踏板位置，相对于踏板中立时的行程	0～300	150	I
7	压脚升起的行程	压脚抬起动作的踏板位置，相对于踏板中立时的行程	0～200	70	I
8	压脚降下的行程	压脚放下动作的踏板位置，相对于踏板中立时的行程	0～200	110	I
9	剪线动作的行程 1	无抬压脚功能时，开始剪线的踏板位置相对于踏板中立时的行程	0～150	70	I
10	剪线动作的行程 2	有抬压脚功能时，开始剪线的踏板位置相对于踏板中立时的行程	0～150	40	I
主轴参数					
1	最高速度	缝纫最高转速	2000～3500rpm	2500	I
2	最低速度	缝纫最低转速	150～300rpm	200	I
3	上死点角度	上死点角度	250～360	290	I
4	下停针位	下停针位位置调整	0～200	60	I
5	急停角度	急停角度	180～360	360	I
6	减噪音功能	0～150 减噪音调节	0～150	8	I
7	电机加重使能	0：无效 1：有效	0/1	0	I
8	电机加重力度	1～15 力度调节	0～15	2	I
9	反转提升使能	0：无效 1：有效	0/1	0	I
10	反转提升角度	反转提针角度	0～45°	20	I
11	上停针脚微调	上停针脚微调	0～200	100	I
12	踏板最高速度	设定踏板的最高转速	200～2500rpm	2500	I
13	补针模式设置	补针模式设置	0/1/2/3	0	I
14	机针下位角度	机针下针角度	0～200	180	I
15	挑线上位角度	挑线上位角度	0～360	300	I
16	入布角度设置	入布角度设置	0～180	40	I
17	出布角度设置	出布角度设置	150～300	195	I
18	定针位置使能	0：无效 1：有效	0/1	1	I
上下滚轮补偿					
1	上滚轮补偿	上滚轮补偿按百分比补偿	0～40	0	I
2	下滚轮补偿	下滚轮补偿按百分比补偿	0～40	0	I
3	上滚轮首针正补偿	上滚轮首针正补偿	0～100	0	I
4	下滚轮首针正补偿	下滚轮首针正补偿	0～100	0	I
5	上滚轮首针负补偿	上滚轮首针逆补偿	0～100	0	I
6	下滚轮首针负补偿	下滚轮首针逆补偿	0～100	0	I
7	上滚轮高速电流	上滚轮高速电流	1～5	5	I
8	下滚轮高速电流	下滚轮高速电流	1～5	5	I
9	上滚轮低速电流	上滚轮低速电流	1～5	3	I
10	下滚轮低速电流	下滚轮低速电流	1～5	3	I
系统调试-系统老化					
1	模式选择	自动测试模式设定 0：标准时间模式 1：针数模式（P98设定针数） 2：简易时间模式 3：出厂老化模式（请勿在机头上使用此模式）	0～3	1	I
2	运行速度	自动测试最高速度设定	200～3000rpm	2200	I
3	运行时间	自动测试运行时间	0～360	30	I
4	停顿时间	自动测试停顿时间设定	0～360	20	I
5	运行开关	0：无效 1：有效	0～2	2	I
左右边界补偿					
1	左右边界补偿开关	左右拐角补偿开关	0～2	0	I
2	左补偿上滚轮值	左拐角补偿上滚轮值	0.0～10.0	0.0	I
3	左补偿下滚轮值	左拐角补偿下滚轮值	0.0～10.0	0.0	I
4	左补偿针数	左拐角补偿针数	0～9	0	I
5	右补偿上滚轮值	右拐角补偿上滚轮值	0.0～10.0	0.0	I
6	右补偿下滚轮值	右拐角补偿下滚轮值	0.0～10.0	0.0	I
7	右补偿针数	右拐角补偿针数	0～9	0	I

五、故障代码：

代码	故障显示	故障内容	故障可能原因	检查项目、处理
1/2	E011 E012	电机信号故障	电机位置传感器信号故障	电机插头是否接触良好 电机信号检测器件是否损坏 缝纫机手轮是否安装到位
6/8	E021 E023	电机超负荷	电机堵转 电机超负荷	电机插头是否接触良好 机头或剪线机构是否卡死 是否缝制规格厚度以上布料 电流检测信号是否正常
9	E101	硬件驱动故障	电流检测非正常驱动器件直通	系统电流检测回路是否工作正常驱动器件是否损坏
10/11	E111 E112	系统电压过高	实际电压偏高制动回路故障电压检测有误	系统进线电压是否过高制动电阻是否工作正常 系统电压检测回路是否工作正常
12/13	E121 E122	系统电压过低	实际电压偏低 电压检测有误	系统进线电压是否过低 系统电压检测回路是否工作正常
14	E131	电流检测回路故障	电流检测非正常	系统电流检测回路是否工作正常
15	E133	OZ 回路故障	OZ 回路非正常	系统OZ 回路是否工作正常
16	E134	DBFLT 故障	自动电阻回路非正常	自动电阻插头是否接触良好自动电阻是否损坏
18	E201	电机电流过大	电流检测非正常 电机运转非正常	系统电流检测回路是否工作正常 电机信号是否正常
19/20	E211 E212	电机运转非正常	电机运转非正常	电机插头是否接触良好电机信号是否不匹配
24	E402	踏板ID 故障	踏板辨识故障	踏板接头松动
25	E403	踏板零位校正故障	踏板零位校正值超出范围	踏板损坏或者校正时踏板不是停止状态
26	E501	翻抬开关故障	翻抬开关有效	放下机头或者检查翻抬开关
27	P.oFF	掉电显示	电源关闭	等待电源重新开通
28	EvAL	试用保护故障	试用时间到	联系代理商
31	E601	硬件驱动故障	摆针电机STEP2 硬件过流	系统电流检测回路是否工作正常驱动器件是否损坏
32	E602	硬件驱动故障	摆针电机STEP2 软件过流	系统电流检测回路是否工作正常驱动器件是否损坏
33	E603	硬件驱动故障	摆针电机STEP2 电流检测回路	系统电流检测回路是否工作正常驱动器件是否损坏
34	E604	电机信号故障	摆针电机STEP2 初始机械角度	送布电机插头是否接触良好
35	E605	电机信号故障	摆针电机STEP2 初始时 编码器或者转子卡死	送布电机插头是否接触良好机械是否有卡点
36	E606	硬件驱动故障	摆针电机STEP2 电机绕组回路	系统电流检测回路是否工作正常 驱动器件是否损坏
40	/	上滚轮步进电机故障	上滚轮步进电机硬件过流	上滚轮步进电机插头是否接触良好驱动器件是否损坏
41	/	下滚轮步进电机故障	下滚轮步进电机硬件过流	下滚轮步进电机插头是否接触良好驱动器件是否损坏
/	L.bob	底线提示	底线计数值为负	更换底线后长按S 键取消提示状态
/	P.bob	计件提示	计数值为零	按 S 键进入界面，长按“前固缝”键 2 秒以上取消提示状态
43	E613	风扇故障	风扇堵转	风扇插头是否接触良好 风扇风叶是否被异物接触导致无法转动

注：1、缝纫动作异常（转向不正常、电磁铁动作异常等）进入监控界面查看机型是否正确；

2、翻抬故障E501 时：确定开关检测是否正常，临时使用可更改翻台安全开关 参数；

3、若以上故障按检查项目不能排除，请寻求技术支持。